CP2101

Single-Chip USB to UART Bridge

Single-Chip USB to UART Data Transfer

- Integrated USB Transceiver; No External Resistors Required
- Integrated Clock; No External Crystal Required
- Integrated 512-Byte EEPROM for Vendor ID, Product ID, Serial Number, Power Descriptor, Release Number and Product Description Strings
- On-Chip Power-On Reset Circuit
- On-Chip Voltage Regulator: 3.3 V Output

USB Function Controller

- USB Specification 2.0 Compliant; Full Speed (12 Mbps)
- USB suspend states supported via SUSPEND pins

Asynchronous Serial Data BUS (UART)

- All Handshaking and Modem Interface Signals
- Data Formats Supported:
  - Data Bits: 8
  - Stop Bits: 1
  - Parity: Odd, Even, No Parity
- Baud Rates: 300 bps to 921.6 kbps
- 512 Byte Receive Buffer; 512 Byte Transmit Buffer
- Hardware or X-On / X-Off Handshaking Supported
- Event Character Support

Virtual COM Port Device Drivers

- Works with Existing COM Port PC Applications
- Royalty-Free Distribution License
- Windows Vista/XP/Server 2003/2000/98SE
- Mac OS-X/OS-9
- Linux 2.40

USBXpress™ Direct Driver Support

- Royalty-Free Distribution License
- Windows Vista/XP/Server 2003/2000
- Windows CE 6.0, 5.0, and 4.2

Example Applications

- Upgrade of RS-232 Legacy Devices to USB
- Cellular Phone USB Interface Cable
- PDA USB Interface Cable
- USB to RS-232 Serial Adapter

Supply Voltage

- Self-powered: 3.0 to 3.6 V
- USB Bus Powered: 4.0 to 5.25 V

Package

- Pb-free 28-pin QFN (5 x 5 mm)

Ordering Part Number

- CP2101-GM

Temperature Range: -40 to +85 °C

Note: The CP2101 is a mature product and is not recommended for new designs. The CP2102 is a pin and software compatible alternative for the CP2101. The CP2102 is recommended for all new designs.

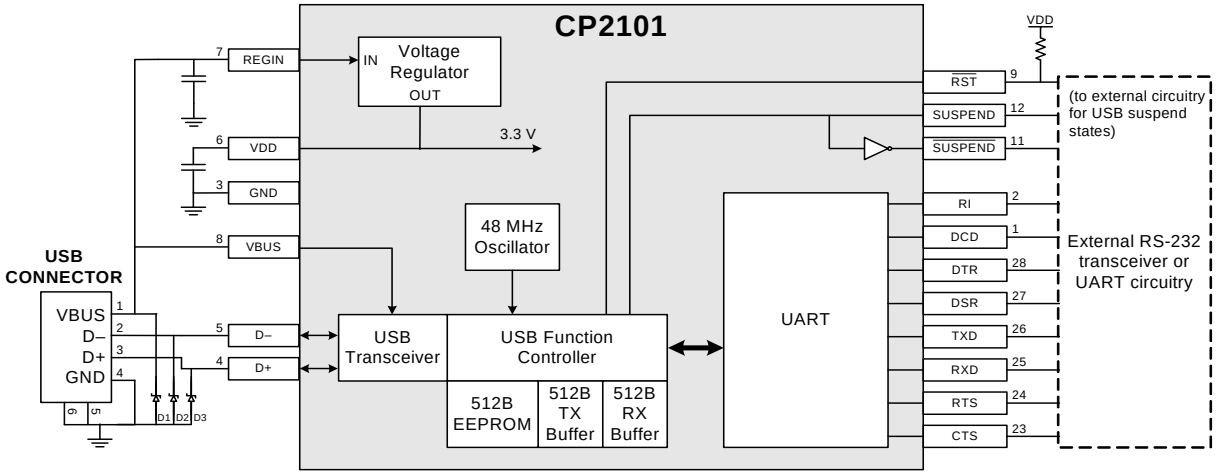

Example System Diagram

Copyright © 2007 by Silicon Laboratories

1. SYSTEM OVERVIEW 5
2. ABSOLUTE MAXIMUM RATINGS 5
Table 2.1. Absolute Maximum Ratings 5
3. GLOBAL DC ELECTRICAL CHARACTERISTICS 6
Table 3.1. Global DC Electrical Characteristics 6
Table 3.2. UART and Suspend I/O DC Electrical Characteristics 6
Table 3.3. Reset Electrical Characteristics 6
4. PINOUT AND PACKAGE DEFINITIONS 7
Table 4.1. Pin Definitions for the CP2101 7
Figure 4.1. QFN-28 Pinout Diagram (Top View) 8
Figure 4.2. QFN-28 Package Drawing 9
Table 4.2. QFN-28 Package Dimensions 9
Figure 4.3. Typical QFN-28 Landing Diagram 10
Figure 4.4. Typical QFN-28 Solder Paste Recommendation 11
5. USB FUNCTION CONTROLLER AND TRANSCEIVER 12
Figure 5.1. Typical Connection Diagram 12
6. ASYNCHRONOUS SERIAL DATA BUS (UART) INTERFACE 13
Table 6.1. Data Formats and Baud Rates 13
7. INTERNAL EEPROM 13
Table 7.1. Default USB Configuration Data 13
8. CP2101 DEVICE DRIVERS 14
8.1. Virtual COM Port Drivers 14
8.2. USBXpress Drivers 14
8.3. Driver Customization 14
8.4. Driver Certification 14
9. VOLTAGE REGULATOR 15
Table 9.1. Voltage Regulator Electrical Specifications 15
Figure 9.1. Configuration 1: USB Bus-Powered 15
Figure 9.2. Configuration 2: USB Self-Powered 16
Figure 9.3. Configuration 3: USB Self-Powered, Regulator Bypassed 16
10. RELEVANT APPLICATION NOTES 17
Document Change List 18

1. System Overview

The CP2101 is a highly-integrated USB-to-UART Bridge Controller providing a simple solution for updating RS-232 designs to USB using a minimum of components and PCB space. The CP2101 includes a USB 2.0 full-speed function controller, USB transceiver, oscillator, EEPROM and asynchronous serial data bus (UART) with full modem control signals in a compact 5 x 5 mm QFN-28 package. No other external USB components are required.

The on-chip EEPROM may be used to customize the USB Vendor ID, Product ID, Product Description String, Power Descriptor, Device Release Number and Device Serial Number as desired for OEM applications. The EEPROM is programmed on-board via the USB allowing the programming step to be easily integrated into the product manufacturing and testing process.

Royalty-free Virtual COM Port (VCP) device drivers provided by Silicon Laboratories allow a CP2101-based product to appear as a COM port to PC applications. The CP2101 UART interface implements all RS-232 signals, including control and handshaking signals, so existing system firmware does not need to be modified. In many existing RS-232 designs, all that is required to update the design from RS-232 to USB is to replace the RS-232 level-translator with the CP2101. Direct access driver support is available through the Silicon Laboratories USBXpress driver set.

The CP2101 is a mature product and is not recommended for new designs. The CP2102 is a pin and software compatible alternative for the CP2101. The CP2102 is recommended for all new designs. Contact Silicon Laboratories customer support at www.silabs.com for any questions about replacing the CP2101.

2. Absolute Maximum Ratings

Table 2.1. Absolute Maximum Ratings

Parameter	Conditions	Min	Typ	Max	Units
Ambient temperature under bias		–55	—	125	°C
Storage Temperature		–65	—	150	°C
Voltage on any I/O Pin or $\overline{RST}$ with respect to GND		–0.3	—	5.8	V
Voltage on V_{DD} with respect to GND		–0.3	—	4.2	V
Maximum Total current through V_{DD} and GND		—	—	500	mA
Maximum output current sunk by $\overline{RST}$ or any I/O pin		—	—	100	mA

Note: Stresses above those listed under “Absolute Maximum Ratings” may cause permanent damage to the device. This is a stress rating only and functional operation of the devices at those or any other conditions above those indicated in the operation listings of this specification is not implied. Exposure to maximum rating conditions for extended periods may affect device reliability.

3. Global DC Electrical Characteristics

Table 3.1. Global DC Electrical Characteristics

V_{DD} = 3.0 to 3.6 V, –40 to +85 °C unless otherwise specified.

Parameter	Conditions	Min	Typ	Max	Units
Supply Voltage		3.0	3.3	3.6	V
Supply Current[1]	Normal Operation; V_{REG} Enable	—	22	26	mA
Supply Current[1]	Suspended; V_{REG} Enable	—	78	200	µA
Supply Current - USB Pull-up[2]		—	200	228	µA
Specified Operating Temperature Range		–40	—	+85	°C

Notes:
1. USB Pull-up Current should be added for total supply current.
2. The USB Pull-up supply current values are calculated values based on USB specifications.

Table 3.2. UART and Suspend I/O DC Electrical Characteristics

V_{DD} = 3.0 to 3.6 V, -40 to +85 °C unless otherwise specified.

Parameters	Conditions	Min	Typ	Max	Units
Output High Voltage	I_{OH} = –3 mA I_{OH} = –10 µA I_{OH} = –10 mA	V_{DD} – 0.7 V_{DD} – 0.1 —	— — V_{DD} – 0.8	— — —	V
Output Low Voltage	I_{OL} = 8.5 mA I_{OL} = 10 µA I_{OL} = 25 mA	— — —	— — 1.0	0.6 0.1 —	V
Input High Voltage		2.0	—	—	V
Input Low Voltage		—	—	0.8	V
Input Leakage Current		—	25	50	µA

Table 3.3. Reset Electrical Characteristics

-40°C to +85°C unless otherwise specified.

Parameter	Conditions	Min	Typ	Max	Units
/RST Output Low Voltage	I_{OL} = 8.5 mA, VDD = 3.0 V to 3.6 V	—	—	0.6	V
/RST Input High Voltage		0.7 x VDD	—	—	V
/RST Input Low Voltage		—	—	0.3 x VDD	
/RST Input Pull-Up Current	/RST = 0.0 V	—	25	40	µA
Minimum /RST Low Time to Generate a System Reset		15	—	—	µs

4. Pinout and Package Definitions

Table 4.1. Pin Definitions for the CP2101

Name	Pin #	Type	Description
V_{DD}	6	Power In Power Out	3.0–3.6 V Power Supply Voltage Input. 3.3 V Voltage Regulator Output. See Section 9.
GND	3		Ground
$\overline{RST}$	9	D I/O	Device Reset. Open-drain output of internal POR or V_{DD} monitor. An external source can initiate a system reset by driving this pin low for at least 15 µs.
REGIN	7	Power In	5 V Regulator Input. This pin is the input to the on-chip voltage regulator.
VBUS	8	D In	VBUS Sense Input. This pin should be connected to the VBUS signal of a USB network. A 5 V signal on this pin indicates a USB network connection.
D+	4	D I/O	USB D+
D–	5	D I/O	USB D–
TXD	26	D Out	Asynchronous data output (UART Transmit)
RXD	25	D In	Asynchronous data input (UART Receive)
CTS	23*	D In	Clear To Send control input (active low)
RTS	24*	D Out	Ready to Send control output (active low)
DSR	27*	D in	Data Set Ready control input (active low)
DTR	28*	D Out	Data Terminal Ready control output (active low)
DCD	1*	D In	Data Carrier Detect control input (active low)
RI	2*	D In	Ring Indicator control input (active low)
SUSPEND	12*	D Out	This pin is driven high when the CP2101 enters the USB suspend state.
SUSPEND	11*	D Out	This pin is driven low when the CP2101 enters the USB suspend state.
NC	10, 13–22		These pins should be left unconnected or tied to V_{DD}.
***Note:** Pins can be left unconnected when not used.			

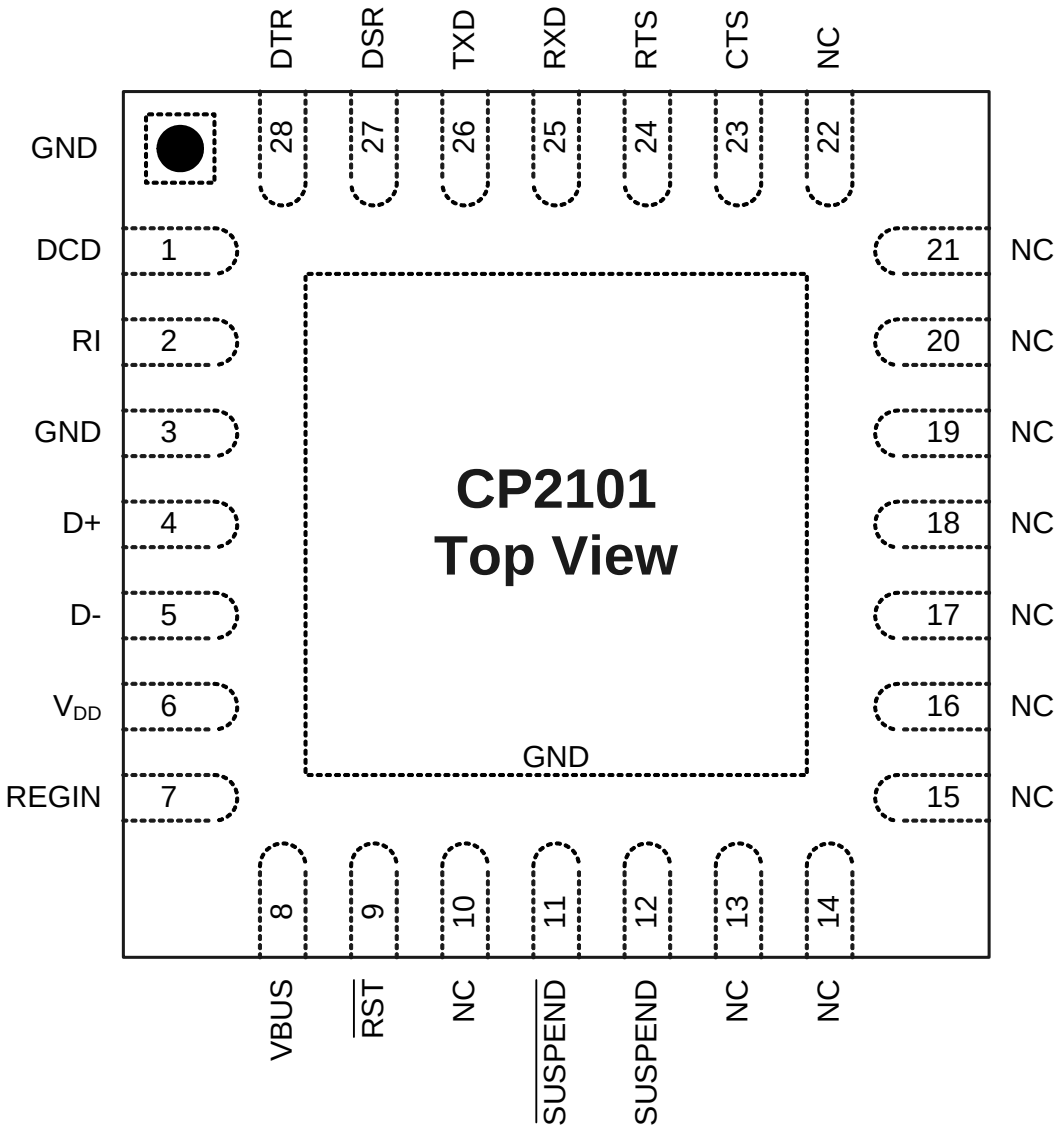

Figure 4.1. QFN-28 Pinout Diagram (Top View)

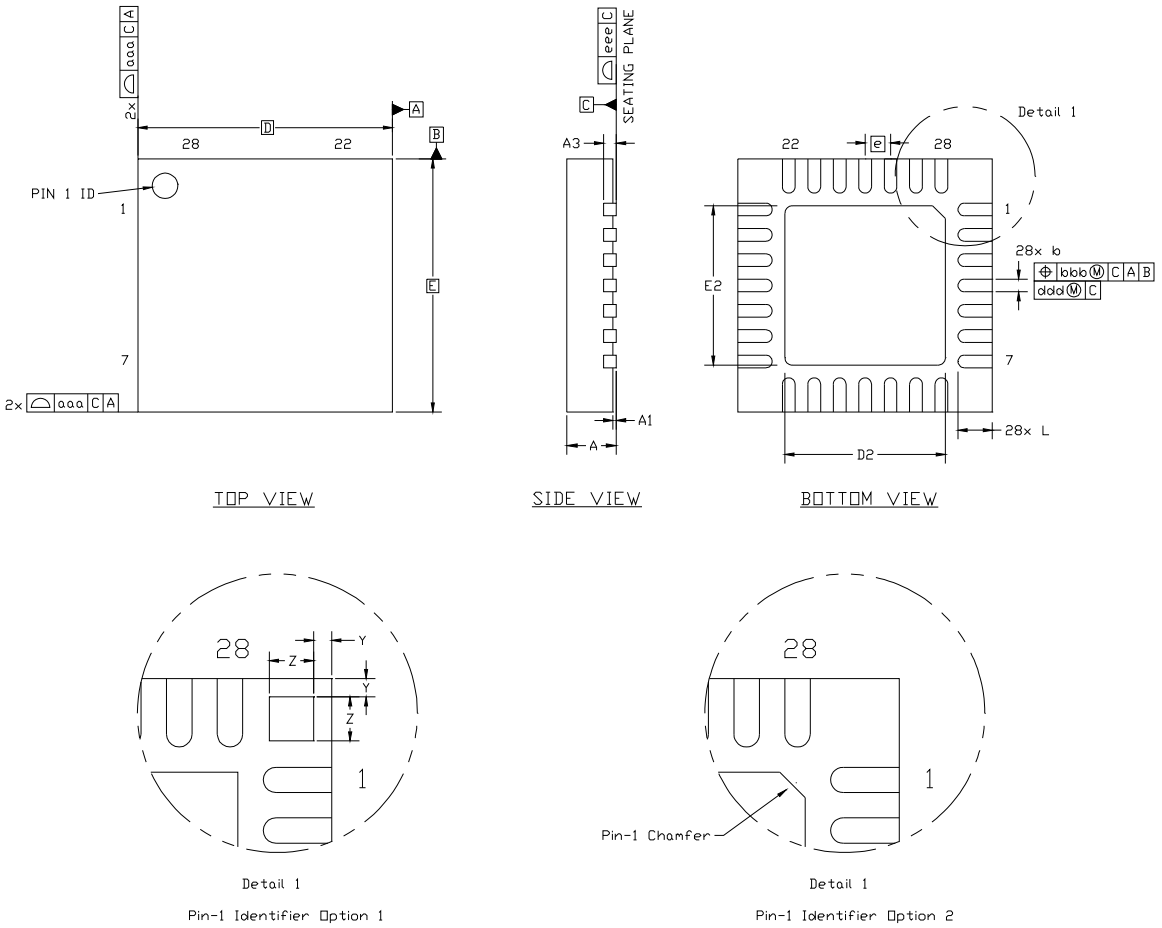

Figure 4.2. QFN-28 Package Drawing

Table 4.2. QFN-28 Package Dimensions

Dimension	Min	Nom	Max
A	0.80	0.90	1.00
A1	0.03	0.07	0.11
A3		0.25 REF	
b	0.18	0.25	0.30
D		5.00 BSC.	
D2	2.90	3.15	3.35
e		0.50 BSC.	
E		5.00 BSC.	

Dimension	Min	Nom	Max
E2	2.90	3.15	3.35
L	0.45	0.55	0.65
aaa		0.15	
bbb		0.10	
ddd		0.05	
eee		0.08	
Z		0.435	
Y		0.18	

Notes:

1. All dimensions shown are in millimeters (mm) unless otherwise noted.
2. Dimensioning and Tolerancing per ANSI Y14.5M-1994.
3. This drawing conforms to JEDEC outline MO-243, variation VHHD except for custom features D2, E2, L, Z, and Y which are toleranced per supplier designation.
4. Recommended card reflow profile is per the JEDEC/IPC J-STD-020C specification for Small Body Components.

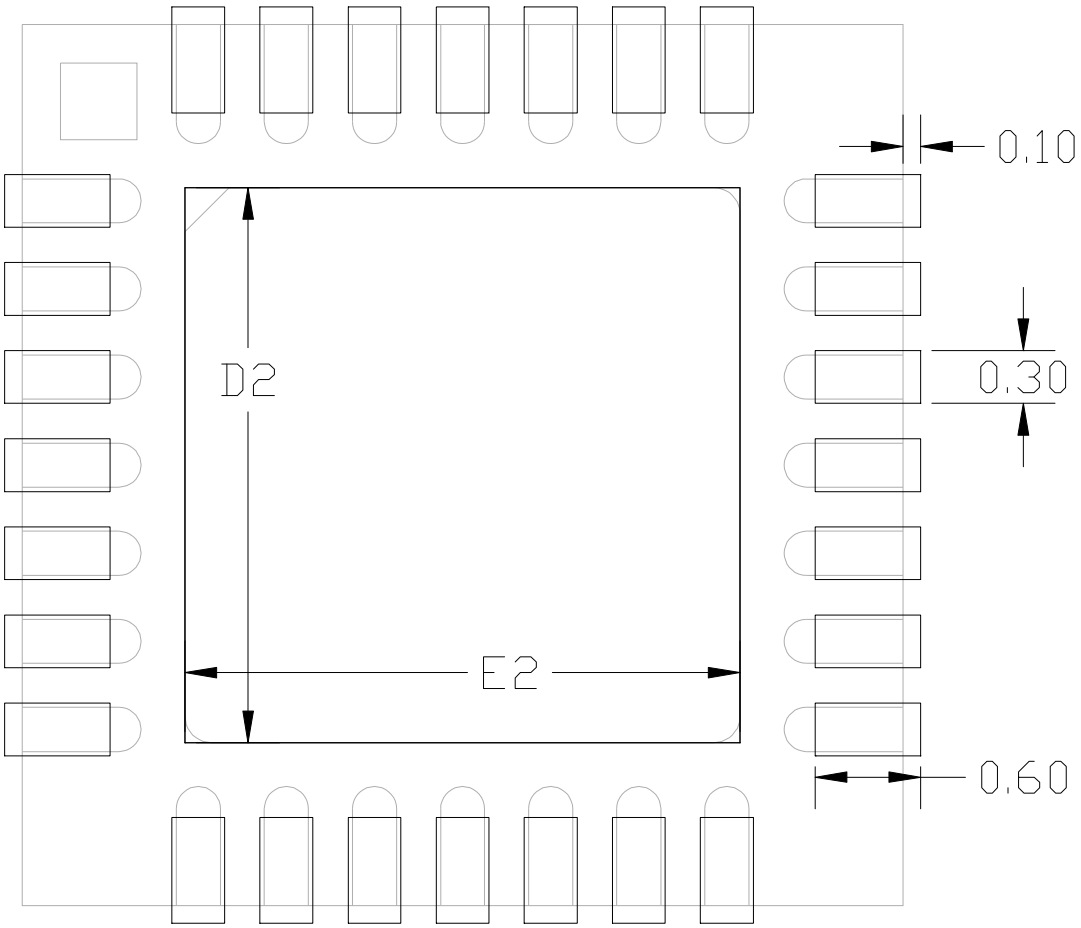

Figure 4.3. Typical QFN-28 Landing Diagram

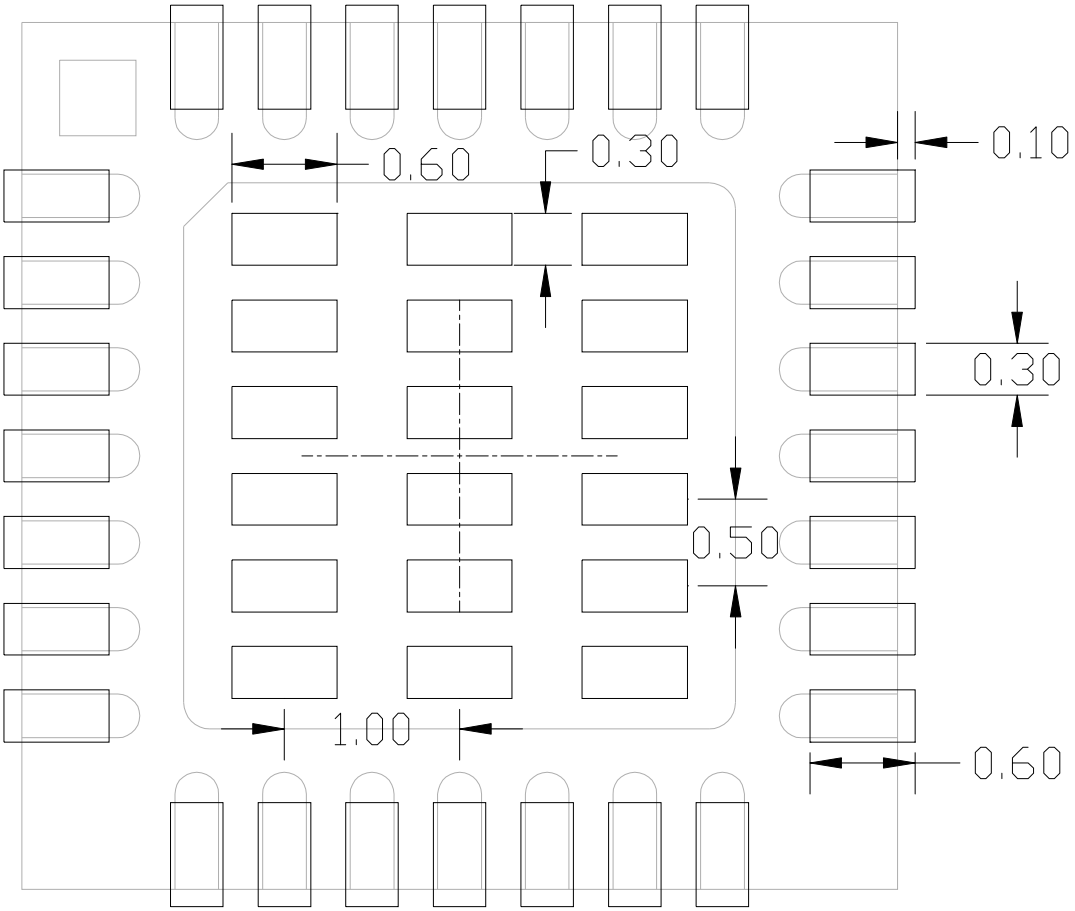

Figure 4.4. Typical QFN-28 Solder Paste Recommendation

5. USB Function Controller and Transceiver

The Universal Serial Bus function controller in the CP2101 is a USB 2.0 compliant full-speed device with integrated transceiver and on-chip matching and pull-up resistors. The USB function controller manages all data transfers between the USB and the UART as well as command requests generated by the USB host controller and commands for controlling the function of the UART.

The USB Suspend and Resume signals are supported for power management of both the CP2101 device as well as external circuitry. The CP2101 will enter Suspend mode when Suspend signaling is detected on the bus. On entering Suspend mode, the CP2101 asserts the SUSPEND and $\overline{\text{SUSPEND}}$ signals. SUSPEND and $\overline{\text{SUSPEND}}$ are also asserted after a CP2101 reset until device configuration during USB Enumeration is complete

The CP2101 exits the Suspend mode when any of the following occur: (1) Resume signaling is detected or generated, (2) a USB Reset signal is detected, or (3) a device reset occurs. On exit of Suspend mode, the SUSPEND and $\overline{\text{SUSPEND}}$ signals are de-asserted.

Both SUSPEND and $\overline{\text{SUSPEND}}$ temporarily float high during a CP2101 reset. If this behavior is undesirable, a strong pulldown (10 kΩ) can be used to ensure $\overline{\text{SUSPEND}}$ remains low during reset. See Figure 5.1 for other recommended options.

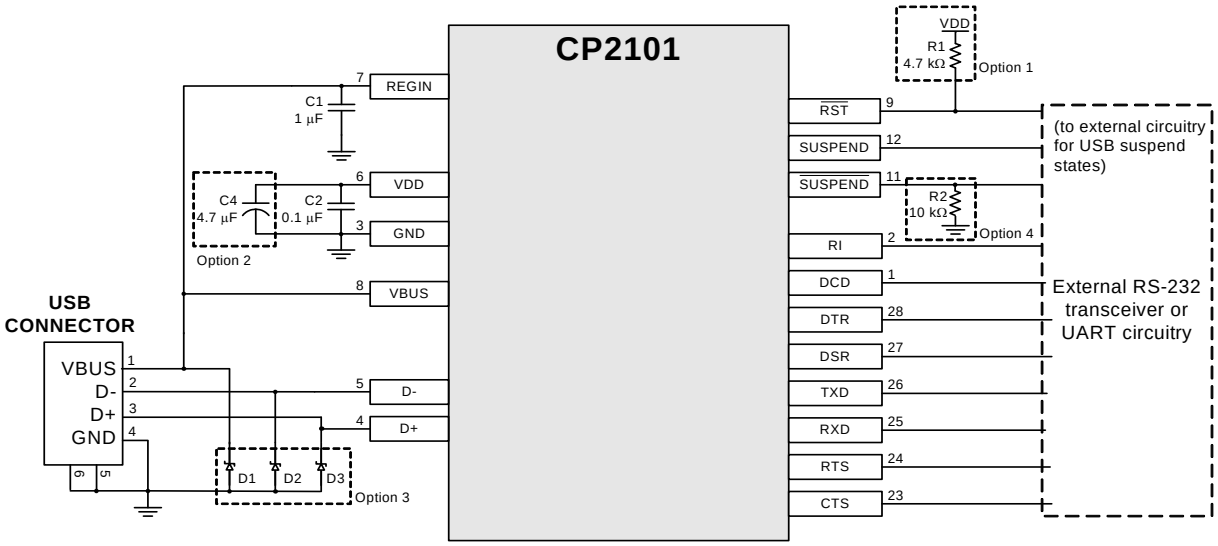

Option 1: A 4.7 kΩ pull-up resistor can be added to increase noise immunity.
Option 2: A 4.7 µF capacitor can be added if powering other devices from the on-chip regulator.
Option 3: Avalanche transient voltage suppression diodes can be added for ESD protection.
Use Littlefuse p/n SP0503BAHT or equivalent.
Option 4: 10 kΩ resistor to ground to hold $\overline{\text{SUSPEND}}$ low on initial power on or device reset.

Figure 5.1. Typical Connection Diagram

6. Asynchronous Serial Data Bus (UART) Interface

The CP2101 UART interface consists of the TX (transmit) and RX (receive) data signals as well as the RTS, CTS, DSR, DTR, DCD and RI control signals. The UART supports RTS/CTS, DSR/DTR and X-On/X-Off handshaking.

The UART is programmable to support a variety of data formats and baud rates. If the Virtual COM Port drivers are used, the data format and baud rate are set during COM port configuration on the PC. If the USBXpress drivers are used, the CP2101 is configured through the USBXpress API. The data formats and baud rates available are listed in Table 6.1.

Table 6.1. Data Formats and Baud Rates

Data Bits	8
Stop Bits	1
Parity Type	None, Even, Odd
Baud Rates	300, 600, 1200, 1800, 2400, 4800, 7200, 9600, 14400, 19200, 28800, 38400, 56000, 57600, 115200, 128000, 230400, 460800, 921600

7. Internal EEPROM

The CP2101 includes an internal EEPROM that may be used to customize the USB Vendor ID (VID), Product ID (PID), Product Description String, Power Descriptor, Device Release Number and Device Serial Number as desired for OEM applications. If the EEPROM is not programmed with OEM data, the default configuration data shown in Table 7.1 is used.

While customization of the USB configuration data is optional, it is recommended to customize the VID/PID combination. A unique VID/PID combination will prevent the driver from conflicting with any other USB driver. A vendor ID can be obtained from www.usb.org or Silicon Laboratories can provide a free PID for the OEM product that can be used with the Silicon Laboratories VID. It is also recommended to customize the serial number if the OEM application is one in which it is possible for multiple CP2101-based devices to be connected to the same PC.

The internal EEPROM is programmed via the USB. This allows the OEM's USB configuration data and serial number to be written to the CP2101 on-board during the manufacturing and testing process. A stand-alone utility for programming the internal EEPROM is available from Silicon Laboratories. A library of routines provided in the form of a Windows® DLL is also available. This library can be used to integrate the EEPROM programming step into custom software used by the OEM to streamline testing and serial number management during manufacturing. The EEPROM has a typical endurance of 100,000 write cycles with a data retention of 100 years.

Table 7.1. Default USB Configuration Data

Name	Value
Vendor ID	10C4h
Product ID	EA60h
Power Descriptor (Attributes)	80h
Power Descriptor (Max. Power)	32h
Release Number	0100h

Table 7.1. Default USB Configuration Data (Continued)

Name	Value
Serial Number	0001 (63 characters maximum)
Product Description String	“CP2101 USB to UART Bridge Controller” (126 characters maximum)

8. CP2101 Device Drivers

There are two sets of device drivers available for the CP2101 devices: the Virtual COM Port (VCP) drivers and the USBXpress Direct Access drivers. Only one set of drivers is necessary to interface with the device.

The latest drivers are available at http://www.silabs.com/products/microcontroller/downloads.asp.

8.1. Virtual COM Port Drivers

The CP2101 Virtual COM Port (VCP) device drivers allow a CP2101-based device to appear to the PC's application software as a COM port. Application software running on the PC accesses the CP2101-based device as it would access a standard hardware COM port. However, actual data transfer between the PC and the CP2101 device is performed over the USB interface. Therefore, existing COM port applications may be used to transfer data via the USB to the CP2101-based device without modifying the application. See Application Note AN197: Code for Example Code for Interfacing to a CP2102 using the Virtual COM drivers.

8.2. USBXpress Drivers

The Silicon Laboratories USBXpress drivers provide an alternate solution for interfacing with CP2102 devices. No Serial Port protocol expertise is required. Instead, a simple, high-level application program interface (API) is used to provide simpler CP201x connectivity and functionality. The USBXpress for CP210x Development Kit includes Windows device drivers, Windows device driver installer and uninstallers, and a host interface function library (host API) provided in the form of a Windows Dynamic Link Library (DLL). The USBXpress driver set is recommended for new products that also include new PC software. The USBXpress interface is described in Application Note “AN169: USBXpress Programmer's Guide.”

8.3. Driver Customization

In addition to customizing the device as described in Section 7. "Internal EEPROM" on page 13, the drivers and the drivers installation package can be also be customized. See Application Note “AN220: USB Driver Customization” for more information on generating customized VCP and USBXpress drivers.

8.4. Driver Certification

The default drivers that are shipped with the CP2101 are Microsoft WHQL (Windows Hardware Quality Labs) certified. The certification means that the drivers have been tested by Microsoft and their latest operating systems (XP and Vista) will allow the drivers to be installed without any warnings or errors.

The customized drivers that are generated using the AN220 software are not automatically certified. They must go first through the Microsoft Driver Reseller Submission process. Contact Silicon Laboratories support for assistance with this process.

9. Voltage Regulator

The CP2101 includes an on-chip 5-to-3 V voltage regulator. This allows the CP2101 to be configured as either a USB bus-powered device or a USB self-powered device. These configurations are shown in Figure 9.1 and Figure 9.2. When enabled, the 3 V voltage regulator output appears on the V_{DD} pin and can be used to power external 3V devices. See Table 9.1 for the voltage regulator electrical characteristics.

Alternatively, if 3 V power is supplied to the V_{DD} pin, the CP2101 can function as a USB self-powered device with the voltage regulator disabled. For this configuration, it is recommended that the REGIN input be tied to the 3 V net to disable the voltage regulator. This configuration is shown in Figure 9.3.

The USB max power and power attributes descriptor must match the device power usage and configuration. See application note “AN144: CP2101 Customization Guide” for information on how to customize USB descriptors for the CP2101.

Note: It is recommended that additional decoupling capacitance (e.g., 0.1 µF in parallel with 1.0 µF) be provided on the REGIN input.

Table 9.1. Voltage Regulator Electrical Specifications

–40 to +85 °C unless otherwise specified.

Parameter	Conditions	Min	Typ	Max	Units
Input Voltage Range		4.0	—	5.25	V
Output Voltage	Output Current = 1 to 100 mA*	3.0	3.3	3.6	V
VBUS Detection Input Threshold		1.0	1.8	4.0	V
Bias Current		—	90	TBD	µA
***Note:** The maximum regulator supply current is 100 mA.					

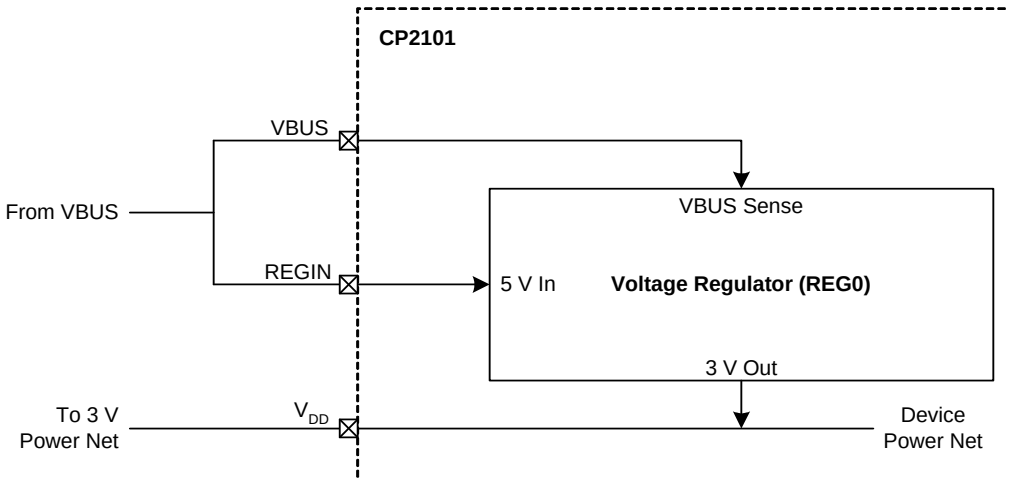

Figure 9.1. Configuration 1: USB Bus-Powered

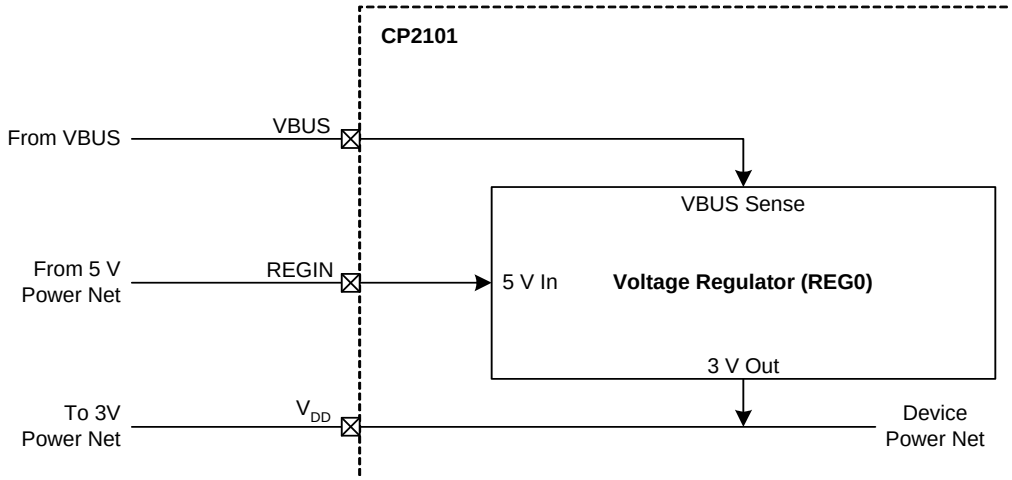

Figure 9.2. Configuration 2: USB Self-Powered

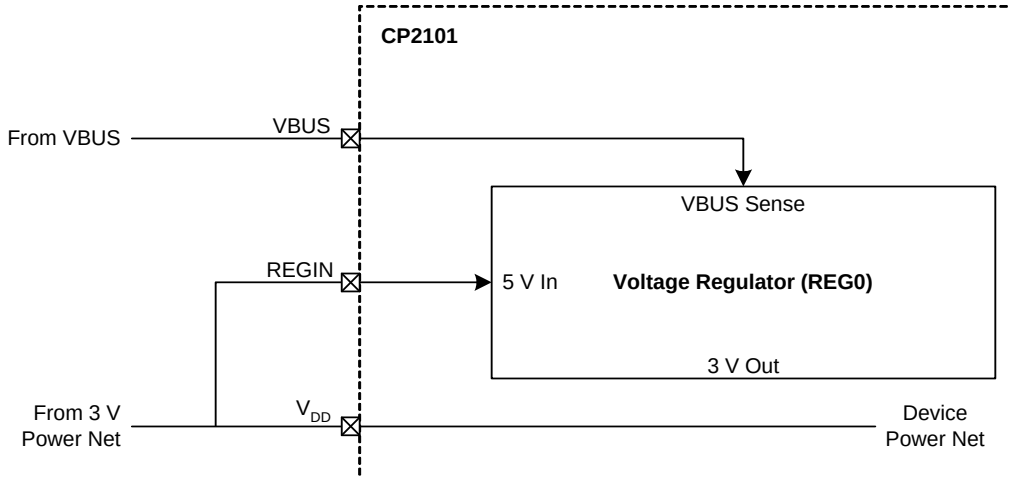

Figure 9.3. Configuration 3: USB Self-Powered, Regulator Bypassed

10. Relevant Application Notes

The following Application Notes are applicable to the CP2101. The latest versions of these application notes and their accompanying software are available at:
http://www.silabs.com/products/microcontroller/applications.asp.

AN144: CP210x Device Customization Guide. This application note describes how to use the AN144 software to configure the USB parameters on the CP2101 devices.

AN169: USBXpress Programmer's Guide. This application note describes the USBXpress API interface and includes example code.

AN197: Serial Communications Guide for the CP210x. This application note describes how to use the standard Windows COM port function to communicate with the CP2101 and includes example code.

AN220: CP210x USB Driver Customization. This application note describes how to use the AN220 software to customize the VCP or USBXpress drivers with OEM information.

DOCUMENT CHANGE LIST

Revision 1.6 to Revision 1.7

- Updated “Linux 2.40” bullet on page 1.
- Changed MLP to QFN throughout.

Revision 1.7 to Revision 1.71

- Removed “Windows CE” bullet from page 1.

Revision 1.71 to Revision 1.8

- Added note on pages 1 and 4 regarding CP2101 not recommend for new designs.
- Added additional supported operating systems on page 1.
- Changed VDD conditions of Tables 3.1 and 3.2 from a minimum of 2.7 to 3.0 V.
- Added values to Table 3.1, “Global DC Electrical Characteristics,” on page 6.
- Updated package drawings in Figure 4.2, Figure 4.3, and Figure 4.4.
- Changed Figure 4.4 title.
- Removed tantalum requirement in Figure 5.1.
- Updated Section 8. "CP2101 Device Drivers" on page 14 with USBXpress, customization, and certification information.
- Added Section 10. "Relevant Application Notes" on page 17.

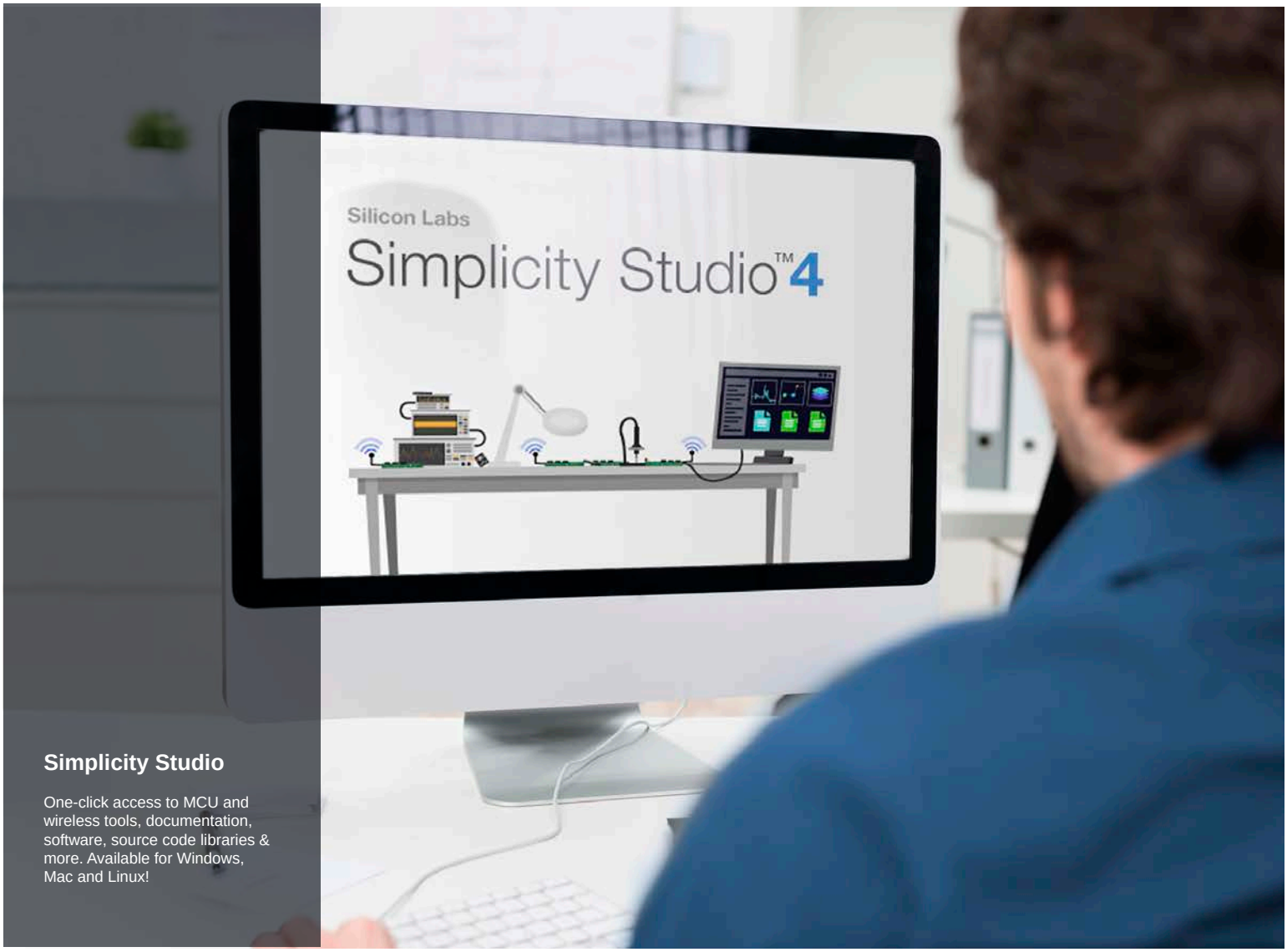

Simplicity Studio

One-click access to MCU and wireless tools, documentation, software, source code libraries & more. Available for Windows, Mac and Linux!

IoT Portfolio
www.silabs.com/IoT

SW/HW
www.silabs.com/simplicity

Quality
www.silabs.com/quality

Support and Community
community.silabs.com

Disclaimer
Silicon Labs intends to provide customers with the latest, accurate, and in-depth documentation of all peripherals and modules available for system and software implementers using or intending to use the Silicon Labs products. Characterization data, available modules and peripherals, memory sizes and memory addresses refer to each specific device, and "Typical" parameters provided can and do vary in different applications. Application examples described herein are for illustrative purposes only. Silicon Labs reserves the right to make changes without further notice and limitation to product information, specifications, and descriptions herein, and does not give warranties as to the accuracy or completeness of the included information. Silicon Labs shall have no liability for the consequences of use of the information supplied herein. This document does not imply or express copyright licenses granted hereunder to design or fabricate any integrated circuits. The products are not designed or authorized to be used within any Life Support System without the specific written consent of Silicon Labs. A "Life Support System" is any product or system intended to support or sustain life and/or health, which, if it fails, can be reasonably expected to result in significant personal injury or death. Silicon Labs products are not designed or authorized for military applications. Silicon Labs products shall under no circumstances be used in weapons of mass destruction including (but not limited to) nuclear, biological or chemical weapons, or missiles capable of delivering such weapons.

Trademark Information
Silicon Laboratories Inc.® , Silicon Laboratories®, Silicon Labs®, SiLabs® and the Silicon Labs logo®, Bluegiga®, Bluegiga Logo®, Clockbuilder®, CMEMS®, DSPLL®, EFM®, EFM32®, EFR, Ember®, Energy Micro, Energy Micro logo and combinations thereof, "the world's most energy friendly microcontrollers", Ember®, EZLink®, EZRadio®, EZRadioPRO®, Gecko®, ISOmodem®, Precision32®, ProSLIC®, Simplicity Studio®, SiPHY®, Telegesis, the Telegesis Logo®, USBXpress® and others are trademarks or registered trademarks of Silicon Labs. ARM, CORTEX, Cortex-M3 and THUMB are trademarks or registered trademarks of ARM Holdings. Keil is a registered trademark of ARM Limited. All other products or brand names mentioned herein are trademarks of their respective holders.

SILICON LABS

Silicon Laboratories Inc.
400 West Cesar Chavez
Austin, TX 78701
USA

http://www.silabs.com