AirBorn

High-Reliability Interconnect Solutions

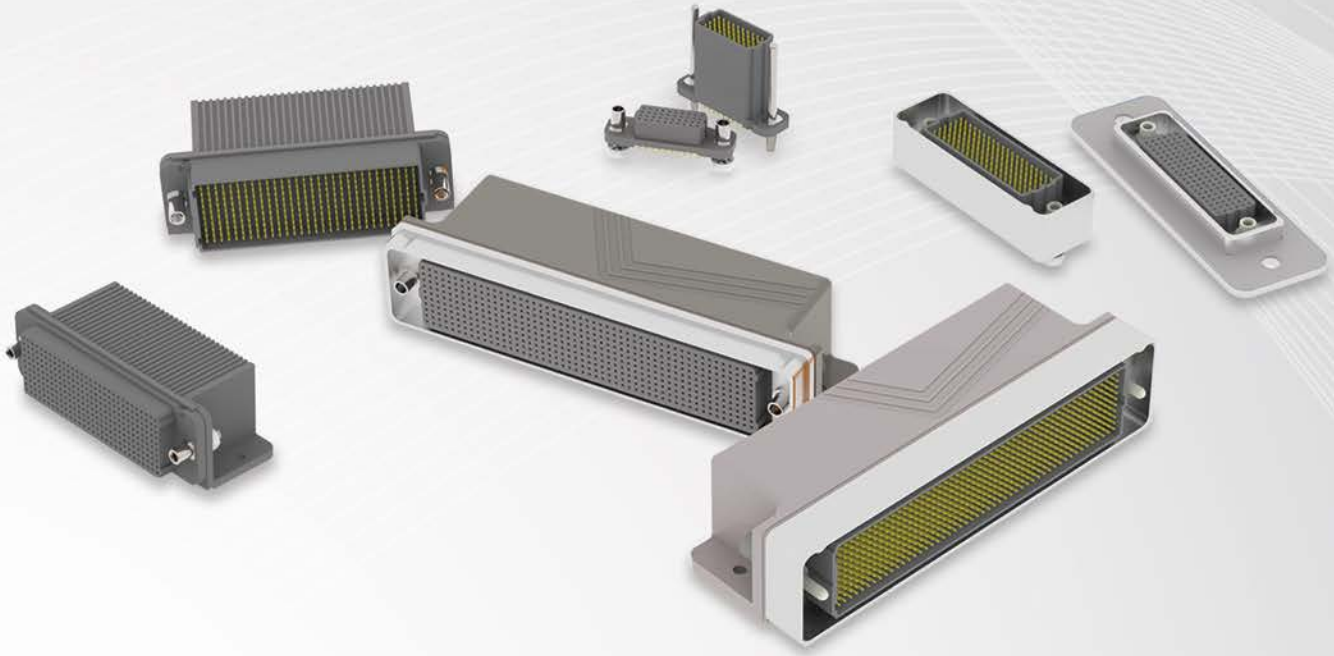

verSI® Interconnect Solution

AirBorn's verSI open-pin field product line is designed to meet the requirements for high-speed/signal integrity applications while delivering the reliability customers expect from AirBorn. The verSI product family affords flexibility in design by offering vertical board-mount, right-angle board-mount, cable I/O, and flex circuit mounting with 40 to 500 contacts. Vertical board-mount plugs and mating vertical receptacles also support board-to-board stacking applications. Boardspacing ranges from 8mm to 25mm. EMI hoods and mounting tabs allow for worry-free mating/un-mating and best-in-class durability.

The AirBorn verSI offers several board termination types including paste-in-hole, thru-hole, and compliant pin pressfit technology, which eliminates the need for costly X-ray inspection.

SI DATA – Simulated (Connectors Only)

1	Differential Insertion Loss	-0.25 dB @ 5 GHz	-3dB @ 16 GHz
2	Differential Return Loss	-20 dB @ 5 GHz	-6 dB @ 14 GHz
3	Differential Impedance	100 ohm ±10% @ 50 ps rise time	
4	Differential Skew	< 2 psec	

VSIB-I

3500 AirBorn Circle — Georgetown, TX 78626 | p. 512.863.5585 | www.airborn.com

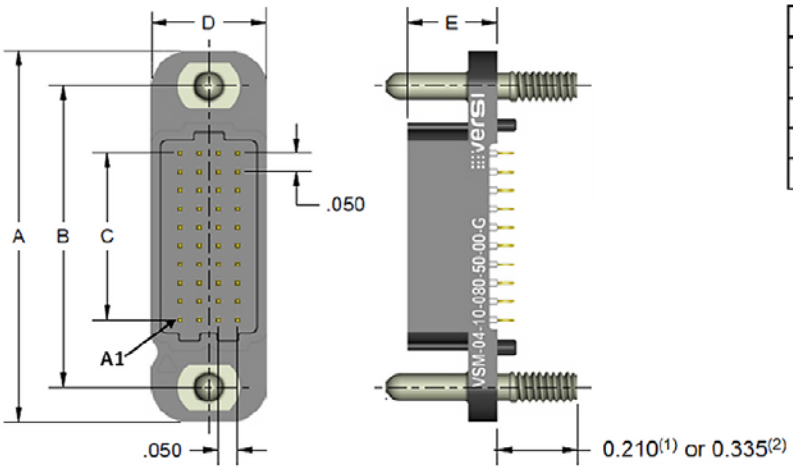

COLUMNS	A (in)	B (in)	C (in)	ROWS	D (in)
10	1.000	0.813	0.450	4	0.300
20	1.500	1.313	0.950	5	0.350
30	2.000	1.813	1.450	6	0.400
40	2.500	2.313	1.950	8	0.500
50	3.000	2.813	2.450	10	0.600

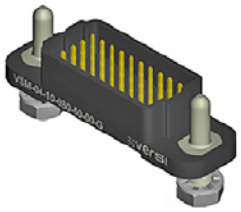

SPACING OPTION CODES	E	
	inches	mm
-080 (8mm)	0.235	5.96
-100 (10mm)	0.314	7.79
-120 (12mm)	0.392	9.95
-160 (16mm)	0.550	13.96
-200 (20mm)	0.707	17.94
-250 (25mm)	0.904	22.94

VSM - VERTICAL (MALE)

VSM signal-integrity connectors are used in vertical, PCB-mount applications where a male interface is required. Termination styles include press-fit, paste-in-hole and plated thru-hole. Pitch: 1.27 mm.

FEATURES

verSI board-mount connectors feature low mating force/high-reliability contact system with four points of contact. The open-pin field design allows for flexibility in termination schemes. Single-ended, differential pair, power, and ground are all available in one connector design. Hardware options: jacking, locking, guide, and no hardware.

MATERIALS & FINISHES

- Pin Contacts: . . . . . Phos bronze per ASTM B103 or BeCu per ASTM B768 (press-fit contact)
- Contact Finish: . . . . . Localized gold finish per ASTM B488 over nickel per ASTM B689 Type I, 50 µIN min
- Molded Insulators: . . . . . .Glass-filled liquid crystal polymer (LCP) per ASTM D5138
- Potting Compound:. . . . . Frey Eng. Co. insulating compound CF3003-80
- Hardware (except washers): . . . . . Stainless steel per ASTM A484/A484M, ASTM A582/A582M, or ASTM A320 . . . . . passivated per SAE AMS-2700, Method 1, Type 2
- Washers: . . . . . Stainless steel per NASM35333 (ASTM A240), passivated per NASM35333 (SAE AMS-2700)
- Solder Paste:. . . . . Sn63Pb37 (PN WS483) and 42Sn/57.6Bi/0.4Ag (PN ALPHA CVP-520)

PERFORMANCE

- Contact Rating: . . . . . 2 amperes maximum
- Operating Temperature: . . . . . -55° to +125° C
- Min. Contact Wipe: . . . . . 1.27 mm (0.050”)
- Contact Normal Force: . . . . . 35-40 grams
- Max. Recommended Operating Voltage: . . . . . .200 V, RMS, 60 Hz
- Insulation Resistance: . . . . . 5,000 megaohms minimum @ 500 VDC
- Durability: . . . . . .2,500 connector mating cycles
- Sinusoidal Vibration: . . . . . 20 g (EIA-364-28, condition IV)
- Shock: . . . . . 50 g (EIA-364-27, condition E)

NOTE: Performance values are estimates & values are subject to change without notice. Please reference engineering document VSM-XX-XX-XXX-XX-XX-XX on airborn.com for the latest specifications to design against. Certificate of RoHS compliance available upon request with each shipment.

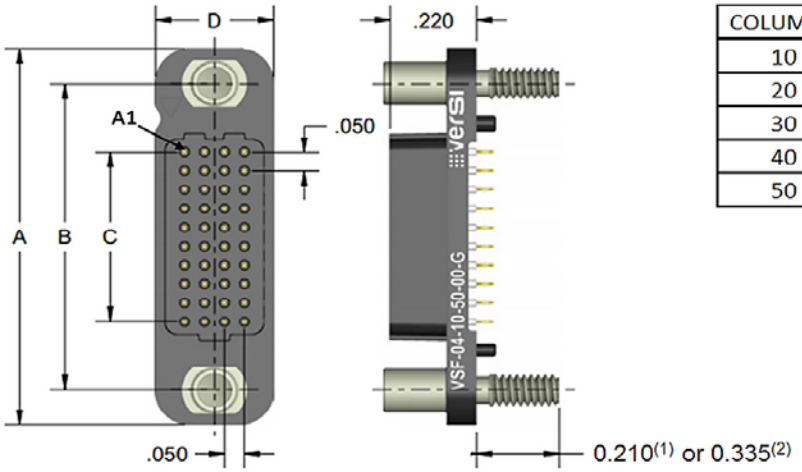

COLUMNS	A (in)	B (in)	C (in)	ROWS	D (in)
10	1.000	0.813	0.450	4	0.300
20	1.500	1.313	0.950	5	0.350
30	2.000	1.813	1.450	6	0.400
40	2.500	2.313	1.950	8	0.500
50	3.000	2.813	2.450	10	0.600

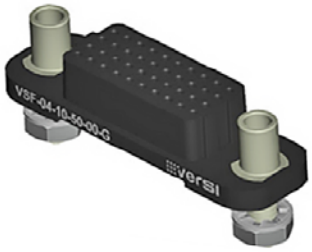

VSF - VERTICAL (FEMALE)

VSF signal-integrity connectors are used in vertical, PCB-mount applications where a male interface is required. Termination styles include press-fit, paste-in-hole and plated thru-hole. Pitch: 1.27 mm.

FEATURES

verSI board-mount connectors feature low mating force / high-reliability contact system with four points of contact. The open-pin field design allows for flexibility in termination schemes. Single-ended, differential pair, power, and ground are all available in one connector design. Hardware options: jacking, locking, guide, and no hardware.

MATERIALS & FINISHES

- Socket Contacts: . . . . . BeCu per ASTM B194
- Contact Finish: . . . . . Localized gold finish per ASTM B488 over nickel per ASTM B689 Type I, 50 µIN min
- Molded Insulators: . . . . . Glass-filled liquid crystal polymer (LCP) per ASTM D5138
- Potting Compound: . . . . . Frey Eng. Co. insulating compound CF3003-80
- Hardware (except washers): . . . . . Stainless steel per ASTM A484/A484M, ASTM A582/A582M, or ASTM A320 . . . . . passivated per SAE AMS-2700, Method 1, Type 2
- Washers: . . . . . Stainless steel per NASM35333 (ASTM A240), passivated per NASM35333 (SAE AMS-2700)
- Solder Paste: . . . . . Sn63Pb37 (PN WS483) and 42Sn/57.6Bi/0.4Ag (PN ALPHA CVP-520)

PERFORMANCE

- Contact Rating: . . . . . 2 amperes maximum
- Operating Temperature: . . . . . -55° to +125° C
- Min. Contact Wipe: . . . . . 1.27 mm (0.050”)
- Contact Normal Force: . . . . . 35-40 grams
- Max. Recommended Operating Voltage: . . . . . 200 V, RMS, 60 Hz
- Insulation Resistance: . . . . . 5,000 megaohms minimum @ 500 VDC
- Durability: . . . . . 2,500 connector mating cycles
- Sinusoidal Vibration: . . . . . 20 g (EIA-364-28, condition IV)
- Shock: . . . . . 50 g (EIA-364-27, condition E)

NOTE: Performance values are estimates & values are subject to change without notice. Please reference engineering document VSF-XX-XX-XXX-XX-XX-XX on airborn.com for the latest engineering to design against. Certificate of RoHS compliance available upon request with each shipment.

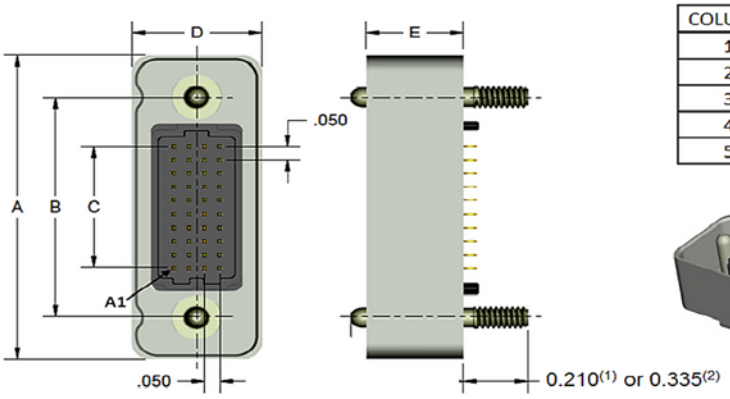

COLUMNS	A (in)	B (in)	C (in)	ROWS	D (in)
10	1.125	0.813	0.450	4	0.425
20	1.625	1.313	0.950	5	0.475
30	2.125	1.813	1.450	6	0.525
40	2.625	2.313	1.950	8	0.625
50	3.125	2.813	2.450	10	0.725

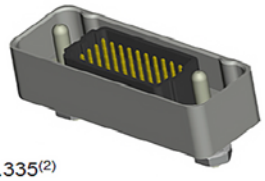

SPACING OPTION CODES	E	
	inches	mm
-080 (8mm)	0.240	6.10
-100 (10mm)	0.319	8.10
-120 (12mm)	0.397	10.08
-160 (16mm)	0.555	14.10
-200 (20mm)	0.712	18.08
-250 (25mm)	0.909	23.09

VRM - VERTICAL RUGGED (MALE)

VRM signal-integrity connectors are ruggedized versions of the standard VSM male connectors. These connectors can be used in extreme environmental conditions while maintaining high reliability and continuous performance. Pitch: 1.27 mm.

FEATURES

verSI board-mount connectors feature low mating force / high-reliability contact system with four points of contact. The open-pin field design allows for flexibility in termination schemes. Single-ended, differential pair, power, and ground are all available in one connector design. Hardware options: jacking, locking, guide, and no hardware.

MATERIALS & FINISHES

- Shell: . . . . . Aluminum alloy 6061-T6 per SAE AMS 4027 or 6061-T6511 per QQ-A-200/8
- Finish:. . . . . Electroless nickel per SAE AMS 2404, Class 3; 500 µIN min
- Pin Contacts:. . . . . Phos bronze per ASTM B103 or BeCu per ASTM B768 (press-fit contact)
- Contact Finish:. . . . . .Localized gold finish per ASTM B488 over nickel per ASTM B689 Type I, 50 µIN min
- Molded Insulators: . . . . . .Glass-filled liquid crystal polymer (LCP) per ASTM D5138
- Potting Compound:. . . . . .Frey Eng. Co. insulating compound CF3003-80
- Hardware (except washers): . . . . . Stainless steel per ASTM A484/A484M, ASTM A582/A582M, or ASTM A320; . . . . . passivated per SAE AMS-2700, Method 1, Type 2
- Washers: . . . . . Stainless steel per NASM35333 (ASTM A240), passivated per NASM35333 (SAE AMS-2700)
- Solder Paste:. . . . . Sn63Pb37 (PN WS483) and 42Sn/57.6Bi/0.4Ag (PN ALPHA CVP-520)

PERFORMANCE

- Contact Rating: . . . . . 2 amperes maximum
- Operating Temperature: . . . . . -55° to +125° C
- Min. Contact Wipe: . . . . . 1.27 mm (0.050”)
- Contact Normal Force: . . . . . 35-40 grams
- Max. Recommended Operating Voltage: . . . . . .200 V, RMS, 60 Hz
- Insulation Resistance:. . . . . 5,000 megaohms minimum @ 500 VDC
- Durability: . . . . . .2,500 connector mating cycles
- Sinusoidal Vibration: . . . . . 20 g (EIA-364-28, condition IV)
- Shock: . . . . . 50 g (EIA-364-27, condition E)

NOTE: Performance values are estimates & values are subject to change without notice. Please reference engineering document VRM-XX-XX-XXX-XX-XX-XX on airborn.com for the latest specifications to design against. Certificate of RoHS compliance available upon request with each shipment.

**VRM 8MM (VRM-XX-XX-080) spacing is not available with mating hardware options.*

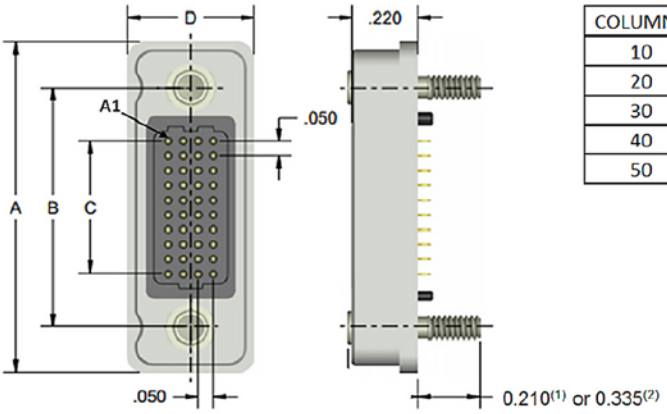

COLUMNS	A (in)	B (in)	C (in)	ROWS	D (in)
10	1.125	0.813	0.450	4	0.425
20	1.625	1.313	0.950	5	0.475
30	2.125	1.813	1.450	6	0.525
40	2.625	2.313	1.950	8	0.625
50	3.125	2.813	2.450	10	0.725

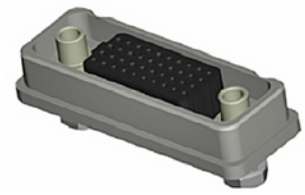

VRF - VERTICAL RUGGED (FEMALE)

VRF signal-integrity connectors are ruggedized versions of the standard VSF female connectors. These connectors can be used in extreme environmental conditions while maintaining high reliability and continuous performance Pitch: 1.27 mm.

FEATURES

verSI board-mount connectors feature low mating force / high-reliability contact system with four points of contact. The open-pin field design allows for flexibility in termination schemes. Single-ended, differential pair, power, and ground are all available in one connector design. Hardware options: jacking, locking, guide, and no hardware.

MATERIALS & FINISHES

- Shell: . . . . . Aluminum alloy 6061-T6 per SAE AMS 4027 or 6061-T6511 per QQ-A-200/8
- Finish:. . . . . Electroless nickel per SAE AMS-2404, Class 3; 500 µIN min
- Socket Contact: . . . . . BeCu per ASTM B194
- Contact Finish:. . . . . .Localized gold finish per ASTM B488 over nickel per ASTM B689 Type I, 50 µIN min
- Molded Insulators: . . . . . Glass-filled liquid crystal polymer (LCP) per ASTM D5138
- Potting Compound: . . . . . .Frey Eng. Co. insulating compound CF3003-80
- Hardware (except washers): . . . . . .Stainless steel per ASTM A484/A484M, A582/A582M or ASTM A320; passivated . . . . . .per SAE AMS-2700, Method 1, Type 2
- Washers: . . . . . Stainless steel per NASM35333 (ASTM A240), passivated per NASM35333 (SAE AMS-2700)
- EMI Gasket (GE, G1E, NE and N1E options only):. . . . . Conductive Elastomer per MIL-DTL-83528 Type D
- Solder Paste:. . . . . Sn63Pb37 (PN WS483) and 42Sn/57.6Bi/0.4Ag (PN ALPHA CVP-520)

PERFORMANCE

- Contact Rating: . . . . . 2 amperes maximum
- Operating Temperature: . . . . . -55° to +125° C
- Min. Contact Wipe: . . . . . 1.27 mm (0.050”)
- Contact Normal Force: . . . . . 35-40 grams
- Max. Recommended Operating Voltage: . . . . . .200 V, RMS, 60 Hz
- Insulation Resistance: . . . . . 5,000 megaohms minimum @ 500 VDC
- Durability: . . . . . .2,500 connector mating cycles
- Sinusoidal Vibration: . . . . . 20 g (EIA-364-28, condition IV)
- Shock: . . . . . 50 g (EIA-364-27, condition E)

NOTE: Performance values are estimates & values are subject to change without notice. Please reference engineering document VRF-XX-XX-XXX-XX-XX-XX on airborn.com for the latest specifications to design against. Certificate of RoHS compliance available upon request with each shipment.

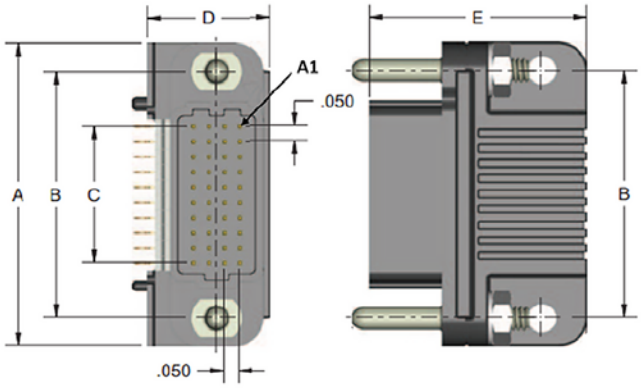

COLUMNS	A (in)	B (in)	C (in)	ROWS	D (in)	E (in)
10	1.000	0.813	0.450	4	0.400	0.713
20	1.500	1.313	0.950	5	0.450	0.763
30	2.000	1.813	1.450	6	0.500	0.813
40	2.500	2.313	1.950	8	0.600	0.913
50	3.000	2.813	2.450	10	0.700	1.013

VSRAM - RIGHT ANGLE (MALE)

VSRAM signal-integrity connectors are used in right angle, PCB-mount applications where a male interface is required. Termination styles include press-fit, paste-in-hole or plated thru-hole. Pitch: 1.27 mm.

FEATURES

verSI board-mount connectors feature low mating force / high-reliability contact system with four points of contact. The open-pin field design allows for flexibility in termination schemes. Single-ended, differential pair, power, and ground are all available in one connector design. Hardware options: jacking, locking, guide, and no hardware.

MATERIALS & FINISHES

- Pin Contacts (Mating Face):. . . . . Phos bronze per ASTM B103
- Pin Contacts (Termination): . . . . . .BeCu per ASTM B768 (press-fit contact) or brass alloy per ASTM B36 (PIH or PTH)
- Contact Finish (Mating Face):. . . . . Localized gold finish per ASTM B488, Type II, Code C over nickel per . . . . . ASTM B689 Type I, 50 µIN min
- Contact Finish (Termination): . . . . . Localized gold finish per ASTM B488, Type II, Code C, 50 µIN min over . . . . . .nickel per ASTM B689 Type I, 50 µIN min (Press Fit) or Localized Gold per ASTM B488 Type I, Code A . . . . . or C, 10-25 µIN over nickel per ASTM B689 Type I, 50 µIN min (PIH or PTH)
- Molded Insulators: . . . . . Glass-filled liquid crystal polymer (LCP) per ASTM D5138
- Potting Compound: . . . . . .Frey Eng. Co. insulating compound CF3003-80
- Hardware (except washers): . . . . . Stainless steel per ASTM A484/A484M, A582/A582M, or ASTM A320; . . . . . passivated per SAE AMS-2700, Method 1, Type 2
- Washers: . . . . . Stainless steel per NASM35333 (ASTM A240), passivated per NASM35333 (SAE AMS-2700)

PERFORMANCE

- Contact Rating: . . . . . 2 amperes maximum
- Operating Temperature: . . . . . -55° to +125° C
- Min. Contact Wipe: . . . . . 1.27 mm (0.050”)
- Contact Normal Force: . . . . . 35-40 grams
- Max. Recommended Operating Voltage: . . . . . .200 V, RMS, 60 Hz
- Insulation Resistance: . . . . . 5,000 megaohms minimum @ 500 VDC
- Durability: . . . . . .2,500 connector mating cycles
- Sinusoidal Vibration: . . . . . 20 g (EIA-364-28, condition IV)
- Shock: . . . . . 50 g (EIA-364-27, condition E)

NOTE: Performance values are estimates & values are subject to change without notice. Please reference engineering document VSRAM-XX-XX-XXX-XX-XX-XX on airborn.com for the latest specificationsto design against. Certificate of RoHS compliance available upon request with each shipment.

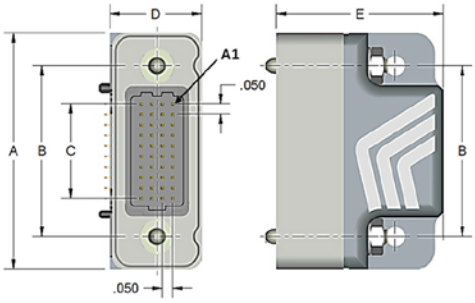

COLUMNS	A (in)	B (in)	C (in)	ROWS	D (in)	E (in)
10	1.125	0.813	0.450	4	0.438	0.798
20	1.625	1.313	0.950	5	0.488	0.848
30	2.125	1.813	1.450	6	0.538	0.898
40	2.625	2.313	1.950	8	0.638	0.998
50	3.125	2.813	2.450	10	0.738	1.098

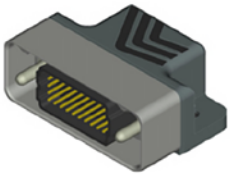

VRRAM - RUGGED, RIGHT ANGLE (MALE)

VRRAM signal-integrity connectors are ruggedized versions of the standard VSRAM male connectors. These connectors can be used in extreme environmental conditions while maintaining high reliability and performance. Pitch: 1.27 mm.

FEATURES

verSI board-mount connectors feature low mating force / high-reliability contact system with four points of contact. The open-pin field design allows for flexibility in termination schemes. Single-ended, differential pair, power, and ground are all available in one connector design. Hardware options: jacking, locking, guide, and no hardware.

MATERIALS & FINISHES

- Shell: . . . . . Aluminum alloy 6061-T6 per SAE AMS 4027 or 6061-T6511 per QQ-A-200/8
- Finish:. . . . . Electroless nickel per SAE AMS-2404, Class 3, 500 µIN min
- Pin Contacts (Mating Face):. . . . . Phos bronze per ASTM B103
- Pin Contacts (Termination): . . . . . .BeCu per ASTM B768 (press-fit contact) or brass alloy per ASTM B36 (PIH or PTH)
- Contact Finish (Mating Face):. . . . . Localized gold finish per ASTM B488, Type II, Code C, over nickel per . . . . . ASTM B689 Type I 50 µIN min
- Contact Finish (Termination Face): . . . . . Localized gold finish per ASTM B488, Type II, Code C, 50 µIN min . . . . . .over nickel per ASTM B689 Type I, 50 µIN min (Press Fit) or Localized Gold per ASTM B488, Type 1, ...Code A or C, 10-25 µIN over nickel per ASTM B689 Type I, 50 µIN min (PIH or PTH)
- Molded Insulators: . . . . . filled liquid crystal polymer (LCP) per ASTM D5138
- Potting Compound: . . . . . .Frey Eng. Co. insulating compound CF3003-80
- Hardware (except washers): . . . . . .Stainless steel per ASTM A484/A484M, A582/A582M, or ASTM A320; . . . . . passivated per SAE AMS-2700, Method 1, Type 2
- Washers: . . . . . Stainless steel per NASM35333 (ASTM A240), passivated per NASM35333 (SAE AMS-2700)

PERFORMANCE

- Contact Rating: . . . . . 2 amperes maximum
- Operating Temperature: . . . . . -55° to +125° C
- Min. Contact Wipe: . . . . . 1.27 mm (0.050”)
- Contact Normal Force: . . . . . 35-40 grams
- Max. Recommended Operating Voltage: . . . . . .200 V, RMS, 60 Hz
- Insulation Resistance: . . . . . 5,000 megaohms minimum @ 500 VDC
- Durability: . . . . . .2,500 connector mating cycles
- Sinusoidal Vibration: . . . . . 20 g (EIA-364-28, condition IV)
- Shock: . . . . . 50 g (EIA-364-27, condition E)

NOTE: Performance values are estimates & values are subject to change without notice. Please reference engineering document VRRAM-XX-XX-XXX-XX-XX-XX on airborn.com for the latest specifications to design against. Certificate of RoHS compliance available upon request with each shipment.

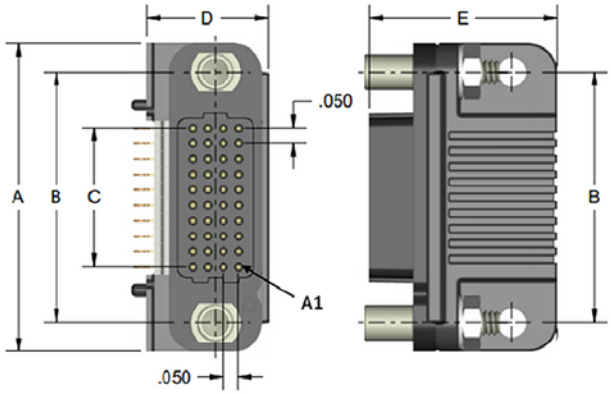

COLUMNS	A (in)	B (in)	C (in)	ROWS	D (in)	E (in)
10	1.000	0.813	0.450	4	0.400	0.619
20	1.500	1.313	0.950	5	0.450	0.669
30	2.000	1.813	1.450	6	0.500	0.719
40	2.500	2.313	1.950	8	0.550	0.769
50	3.000	2.813	2.450	10	0.600	0.819

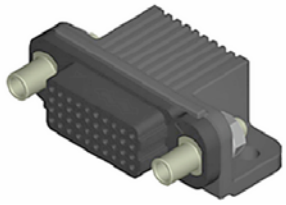

VSRAF - RIGHT ANGLE (FEMALE)

VSRAF signal-integrity connectors are used in right angle, PCB-mount applications where a female interface is required. Termination styles include press-fit, paste-in-hole or plated thru-hole. Pitch: 1.27 mm.

FEATURES

verSI board-mount connectors feature low mating force / high-reliability contact system with four points of contact. The open-pin field design allows for flexibility in termination schemes. Single-ended, differential pair, power, and ground are all available in one connector design. Hardware options: jacking, locking, guide, and no hardware.

MATERIALS & FINISHES

- Socket Contact (Mating Face): . . . . . per ASTM B194
- Socket Contact (Termination): . . . .Brass alloy per ASTM B36 (PIH or PTH) or BeCu per ASTM B768 (press-fit contact)
- Contact Finish (Mating Face):. . . . . Localized gold finish per ASTM B488, Type II, Code C over nickel per . . . . . .ASTM B689 Type I, 50 µIN min
- Contact Finish (Termination):. . . . . Localized gold finish per ASTM B488, Type II, Code C, 50 µIN min over . . . . . nickel per ASTM B689 Type I, 50 µIN min (Press Fit) or localized gold per ASTM B488, Type 1, Code A or C, ... 10-25 µIN over nickel per ASTM B689 Type I, 50 µIN min (PIH or PTH)
- Molded Insulators: . . . . . .Glass-filled liquid crystal polymer (LCP) per ASTM D5138
- Potting Compound: . . . . . .Frey Eng. Co. insulating compound CF3003-80
- Hardware (except washers): . . . . . Stainless steel per ASTM A484/A484M, A582/A582M or ASTM A320; . . . . . passivated per SAE AMS-2700, Method 1, Type 2
- Washers: . . . . . Stainless steel per NASM35333 (ASTM A240), passivated per NASM35333 (SAE AMS-2700)

PERFORMANCE

- Contact Rating: . . . . . 2 amperes maximum
- Operating Temperature: . . . . . -55° to +125° C
- Min. Contact Wipe: . . . . . 1.27 mm (0.050”)
- Contact Normal Force: . . . . . 35-40 grams
- Max. Recommended Operating Voltage: . . . . . .200 V, RMS, 60 Hz
- Insulation Resistance: . . . . . 5,000 megaohms minimum @ 500 VDC
- Durability: . . . . . .2,500 connector mating cycles
- Sinusoidal Vibration: . . . . . 20 g (EIA-364-28, condition IV)
- Shock: . . . . . 50 g (EIA-364-27, condition E)

NOTE: Performance values are estimates & values are subject to change without notice. Please reference engineering document VSM-XX-XX-XXX-XX-XX-XX on airborn.com for the latest specifications to design against. Certificate of RoHS compliance available upon request with each shipment.

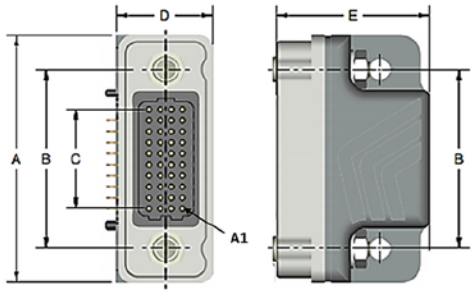

COLUMNS	A (in)	B (in)	C (in)	ROWS	D (in)	E (in)
10	1.125	0.813	0.450	4	0.438	0.699
20	1.625	1.313	0.950	5	0.488	0.749
30	2.125	1.813	1.450	6	0.538	0.799
40	2.625	2.313	1.950	8	0.638	0.899
50	3.125	2.813	2.450	10	0.738	0.999

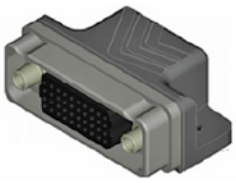

VRRAF - RUGGED, RIGHT ANGLE (FEMALE)

VRRAF signal-integrity connectors are ruggedized versions of the standard VSRAF female connectors. These connectors can be used in extreme environmental conditions while maintaining high reliability and performance. Pitch: 1.27 mm.

FEATURES

verSI board-mount connectors feature low mating force / high-reliability contact system with four points of contact. The open-pin field design allows for flexibility in termination schemes. Single-ended, differential pair, power, and ground are all available in one connector design. Hardware options: jacking, locking, guide, and no hardware.

MATERIALS & FINISHES

- Shell: . . . . . Aluminum alloy 6061-T6 per SAE AMS 4027 or 6061-T6511 per QQ-A-200/8
- Finish:. . . . . Electroless nickel per AMS-2404, Class 3; 500 µIN min
- Socket Contact (Mating Face): . . . . . BeCu per ASTM B194
- Socket Contact (Termination): . . . .Brass alloy per ASTM B36 (PIH or PTH) or BeCu per ASTM B768 (press-fit contact)
- Contact Finish (Mating Face):. . . . . Localized gold finish per ASTM B488 , Type II, Code C over nickel per . . . . . ASTM B689, Type I, 50 µIN min
- Contact Finish (Termination):. . . . . Localized gold finish per ASTM B488, Type II, Code C, 50 µIN min over nickel . . . . . per ASTM B689, Type I, 50 µIN min (Press Fit) or localized gold per ASTM B488, Type 1, Code A or C, ... 10-25 µIN over nickel per ASTM B689 Type I, 50 µIN min (PIH or PTH)
- Molded Insulators: . . . . . Glass-filled liquid crystal polymer (LCP) per ASTM D5138
- Potting Compound: . . . . . .Frey Eng. Co. insulating compound CF3003-80
- Hardware (except washers): . . . . . Stainless steel per ASTM A484/A484M, A582/A582M or ASTM A320; . . . . . passivated per SAE AMS-2700, Method 1, Type 2
- Washers: . . . . . Stainless steel per NASM35333 (ASTM A240), passivated per NASM35333 (SAE AMS-2700)
- EMI Gasket (GE and NE options only):. . . . . Conductive Elastomer per MIL-DTL-83528 Type D

PERFORMANCE

- Contact Rating: . . . . . 2 amperes maximum
- Operating Temperature: . . . . . -55° to +125° C
- Min. Contact Wipe: . . . . . 1.27 mm (0.050”)
- Contact Normal Force: . . . . . 35-40 grams
- Max. Recommended Operating Voltage: . . . . . .200 V, RMS, 60 Hz
- Insulation Resistance: . . . . . 5,000 megaohms minimum @ 500 VDC
- Durability: . . . . . .2,500 connector mating cycles
- Sinusoidal Vibration: . . . . . 20 g (EIA-364-28, condition IV)
- Shock: . . . . . 50 g (EIA-364-27, condition E)

NOTE: Performance values are estimates & values are subject to change without notice. Please reference engineering document VRRAF-XX-XX-XXX-XX-XX-XX on airborn.com for the latest specifications to design against. Certificate of RoHS compliance available upon request with each shipment.

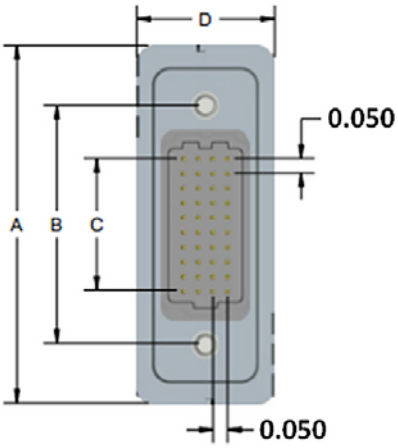

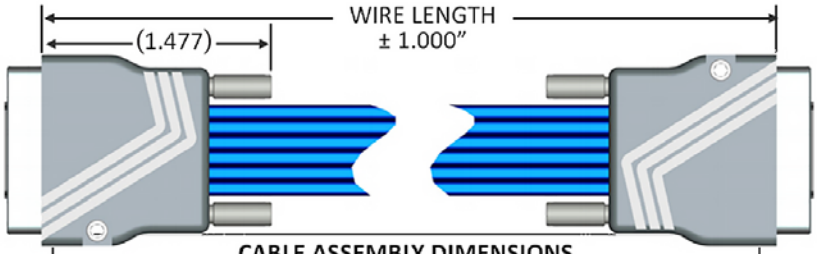

CABLE ASSEMBLY DIMENSIONS

Columns	A	B	C	Rows	D
10	1.222	0.813	0.450	4	0.470
20	1.722	1.313	0.950	5	0.520
30	2.222	1.813	1.450	6	0.570
40	2.722	2.313	1.950	8	0.670
50	3.222	2.813	2.450	10	0.770

VRD - DIFFERENTIAL PAIR TWINAX CABLE ASSEMBLY

VRD cable assemblies are designed for twinax applications. These cable assemblies come in standard lengths but custom lengths and configurations can also be requested. Ruggedized hoods are standard. Pitch: 1.27 mm.

FEATURES

VerSI connectors feature low mating force/high-reliability contact system with four points of contact. The open-pin field design allows for flexibility in termination schemes. Single-ended, differential pair, power, and ground are all available in one connector design.

MATERIALS & FINISHES

- Shell: . . . . . Aluminum alloy 6061-T6 per QQ-A-250/11 or 6061-T6511 per QQ-A-200/8
- Finish:. . . . . Electroless nickel per SAE AMS-C-26074, Grade B, Class 3
- Socket Contact: . . . . . BeCu per ASTM B194
- Pin Contacts:. . . . . Phos bronze per ASTM B103
- Contact Finish:. . . . . .Localized gold finish per ASTM B488 over nickel per ASTM B689 Type I
- Wire: . . . . . 30 AWG*; 19/42 silver-plated copper
- Molded Insulators: . . . . . Glass-filled liquid crystal polymer (LCP) per ASTM D5138
- Hardware: . . . . . .Stainless steel per ASTM A582/A582M or ASTM A320; passivated per SAE AMS-2700
- Embedment: . . . . . Frey Eng. Co. insulating compound CF3003-80 and L-II-49 or equivalent

PERFORMANCE

- Contact Rating: . . . . . 2 amperes maximum
- Operating Temperature: . . . . . -55° to +125° C
- Min. Contact Wipe: . . . . . 1.27 mm (0.050")
- Contact Normal Force: . . . . . 35-40 grams
- Max. Recommended Operating Voltage: . . . . . .200 V, RMS, 60 Hz
- Insulation Resistance: . . . . . 5,000 megaohms minimum @ 500 VDC
- Durability: . . . . . .2,500 connector mating cycles
- Sinusoidal Vibration: . . . . . 20 g (EIA-364-28, condition IV)
- Shock: . . . . . 50 g (EIA-364-27, condition E)

NOTE: Performance values are estimates & values are subject to change without notice. Please reference engineering document VRD-XX-XX-XXX-XX-XX-XX on airborn.com for the latest specifications to design against. Certificate of RoHS compliance available upon request with each shipment.

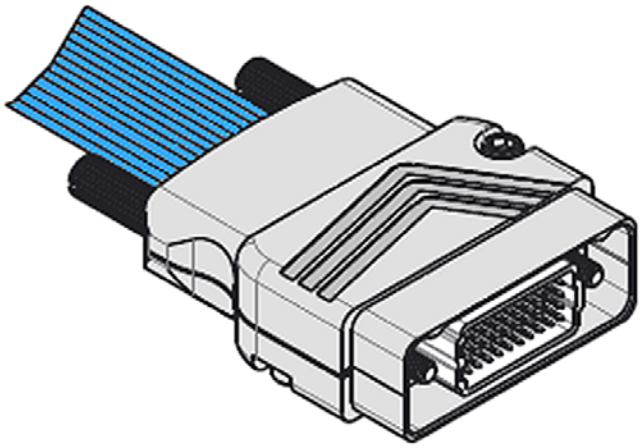

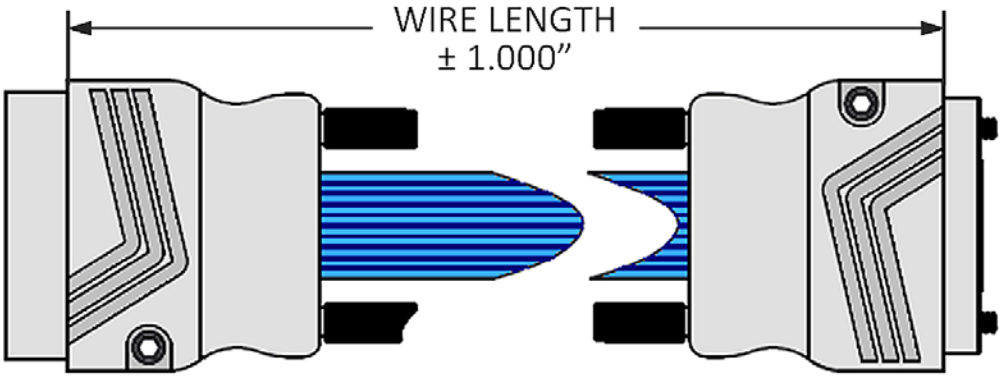

CONNECTOR 1 CONNECTOR 2

VRW - DISCRETE WIRE CABLE ASSEMBLY WITH INTERNAL SODLER CONNECTION

VRW cable assemblies come in standard wire and lengths but custom wire and length options are available. Ruggedized shells are standard. Pitch: 1.27 mm.

FEATURES

VerSI connectors feature low mating force/high-reliability contact system with four points of contact. The open pin field design allows for flexibility in termination schemes. Single-ended, differential pair, power, and ground are all available in one connector design.

MATERIALS & FINISHES

- Shell: . . . . . Aluminum alloy 6061-T6 per QQ-A-250/11 or 6061-T6511 per QQ-A-200/8
- Finish . . . . . .Electro-less nickel per SAE AMS-2404, Class 3; 500 µ”, min.
- Socket Contact: . . . . . BeCu per ASTM B194
- Pin Contacts:. . . . . .Phos bronze per ASTM B103 or per BeCu ASTM B768
- Contact Finish:. . . . . .Localized gold finish per ASTM B488 over nickel per ASTM B689 Type I
- Molded Insulators . . . . . .Glass-filled liquid crystal polymer (LCP) per ASTM D5138
- Embedment: . . . . . Frey Eng. Co. insulating compound CF3003-80 and L-II-49 or equivalent
- Hardware: . . . . . .Stainless steel per ASTM A582/A582M or ASTM A320; passivated per SAE AMS-2700

Please reference engineering document VRW-XX-XX-XXX-XX-XX-XX on airborn.com for the latest engineering specifications to design against.

VRW DIMENSIONS

MALE (CONNECTOR 1)

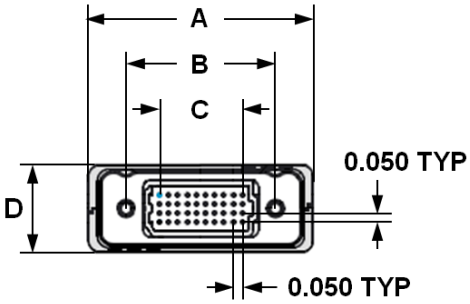

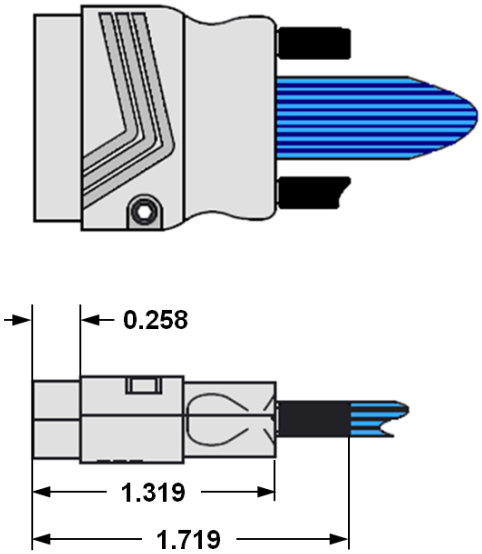

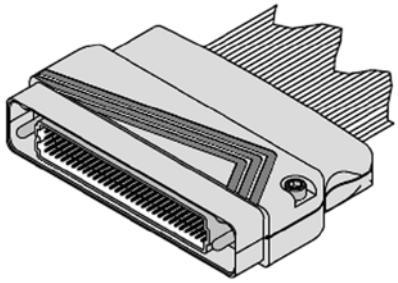

Columns	A	B	C	D	Rows
10	1.222	0.813	0.450	0.470	4
20	1.722	1.313	0.950	0.520	5
30	2.222	1.813	1.450	0.570	6
40	2.722	2.313	1.950	0.670	8
50	3.222	2.813	2.450	0.770	10

Tolerances (unless othewise specified): ±0.010"

FEMALE (CONNECTOR 2)

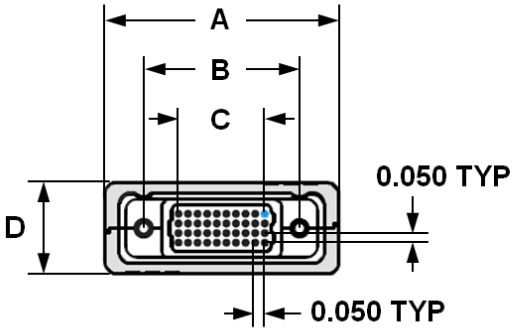

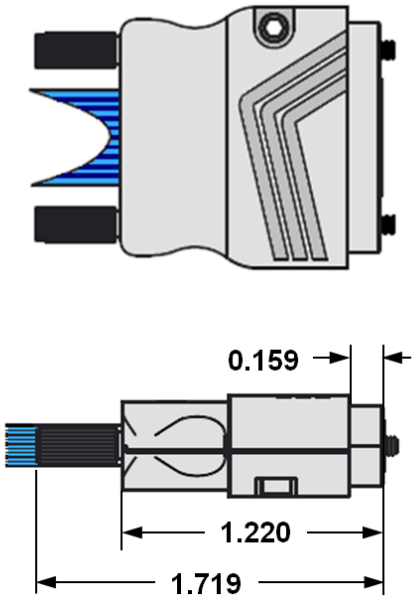

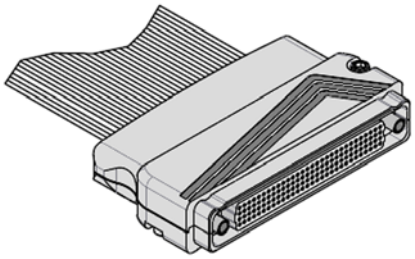

VRW PINOUTS

1-TO-1 WIRE CHART FOR JUMPER ASSEMBLIES

(Table illustrates connections for a 4-row, 10-column connector)

CONN 1		CONN 2	CONN 1		CONN 2	CONN 1		CONN 2	CONN 1		CONN 2
A1 —	BLK	— A1	B1 —	BLK	— B1	C1 —	BLK	— C1	D1 —	BLK	— D1
A2 —	BRN	— A2	B2 —	BRN	— B2	C2 —	BRN	— C2	D2 —	BRN	— D2
A3 —	RED	— A3	B3 —	RED	— B3	C3 —	RED	— C3	D3 —	RED	— D3
A4 —	ORN	— A4	B4 —	ORN	— B4	C4 —	ORN	— C4	D4 —	ORN	— D4
A5 —	YEL	— A5	B5 —	YEL	— B5	C5 —	YEL	— C5	D5 —	YEL	— D5
A6 —	GRN	— A6	B6 —	GRN	— B6	C6 —	GRN	— C6	D6 —	GRN	— D6
A7 —	BLU	— A7	B7 —	BLU	— B7	C7 —	BLU	— C7	D7 —	BLU	— D7
A8 —	VIO	— A8	B8 —	VIO	— B8	C8 —	VIO	— C8	D8 —	VIO	— D8
A9 —	GRY	— A9	B9 —	GRY	— B9	C9 —	GRY	— C9	D9 —	GRY	— D9
A10 —	WHT	— A10	B10 —	WHT	— B10	C10 —	WHT	— C10	D10 —	WHT	— D10

Wire colors per M83513 are ten (10) solid colors, repeating when there are more than 10 columns.

MALE

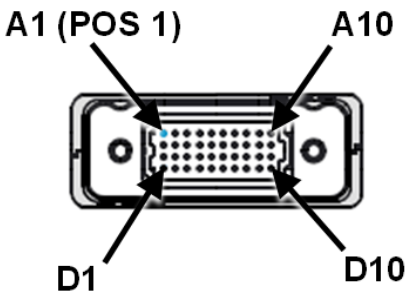

FEMALE

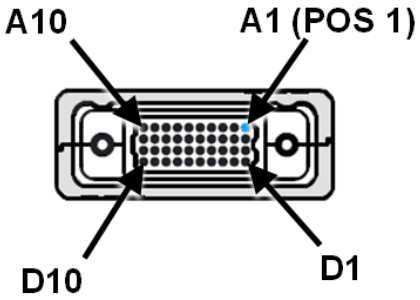

Sample part number:
VRW-04-10-30-01G-03G-A030

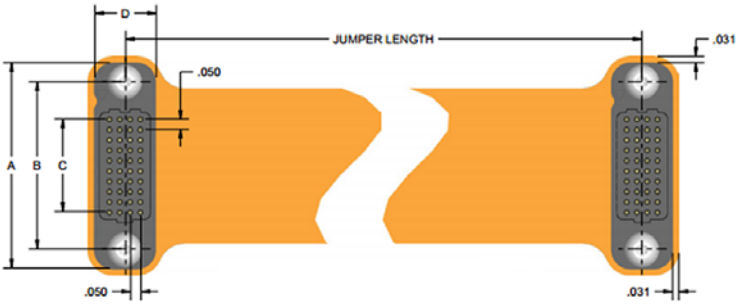

FLEX JUMPER DIMENSIONS					
Columns	A	B	C	Rows	D
10	1.000	0.813	0.450	4	0.300
20	1.500	1.313	0.950	5	0.350
30	2.000	1.813	1.450	6	0.400
40	2.500	2.313	1.950	8	0.500
50	3.000	2.813	2.450	10	0.700

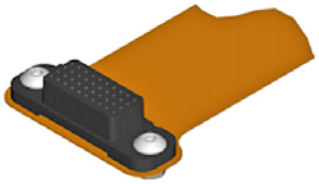

VSX - FLEXIBLE CIRCUIT JUMPER ASSEMBLY

VSX flexible circuit jumpers come in standard lengths and wiring configurations, but custom specifications can be requested. Pitch: 1.27 mm.

FEATURES

verSI connectors feature low mating force/high-reliability contact system with four points of contact. The open-pin field design allows for flexibility in termination schemes. Single-ended, differential pair, power, and ground are all available in one connector design.

MATERIALS & FINISHES

- Socket Contact: . . . . . BeCu per ASTM B194
- Pin Contacts: . . . . . Phos bronze per ASTM B103 or per BeCu ASTM B768 (press-fit contact)
- Contact Finish: . . . . . Localized gold finish per ASTM B488 over nickel per ASTM B689 Type I
- Molded Insulators: . . . . . Glass-filled liquid crystal polymer (LCP) per ASTM D5138
- Hardware: . . . . . Stainless steel per ASTM A582/A582M, or ASTM A320; . . . . . passivated per ASTM A967, SAE AMS-QQ-P-35

PERFORMANCE

- Contact Rating: . . . . . 2 amperes maximum
- Operating Temperature: . . . . . -55° to +125° C
- Min. Contact Wipe: . . . . . 1.27 mm (0.050”)
- Contact Normal Force: . . . . . 35-40 grams
- Max. Recommended Operating Voltage: . . . . . 200 V, RMS, 60 Hz
- Insulation Resistance: . . . . . 5,000 megaohms minimum @ 500 VDC
- Durability: . . . . . 2,500 connector mating cycles
- Sinusoidal Vibration: . . . . . 20 g (EIA-364-28, condition IV)
- Shock: . . . . . 50 g (EIA-364-27, condition E)

NOTE: Performance values are estimates & values are subject to change without notice. Please reference engineering document VSX-XX-XX-XXX-XX-XX-XX on airborn.com for the latest specifications to design against. Certificate of RoHS compliance available upon request with each shipment.

verSI VERTICAL MISALIGNMENT & ENGAGEMENT DIAGRAM

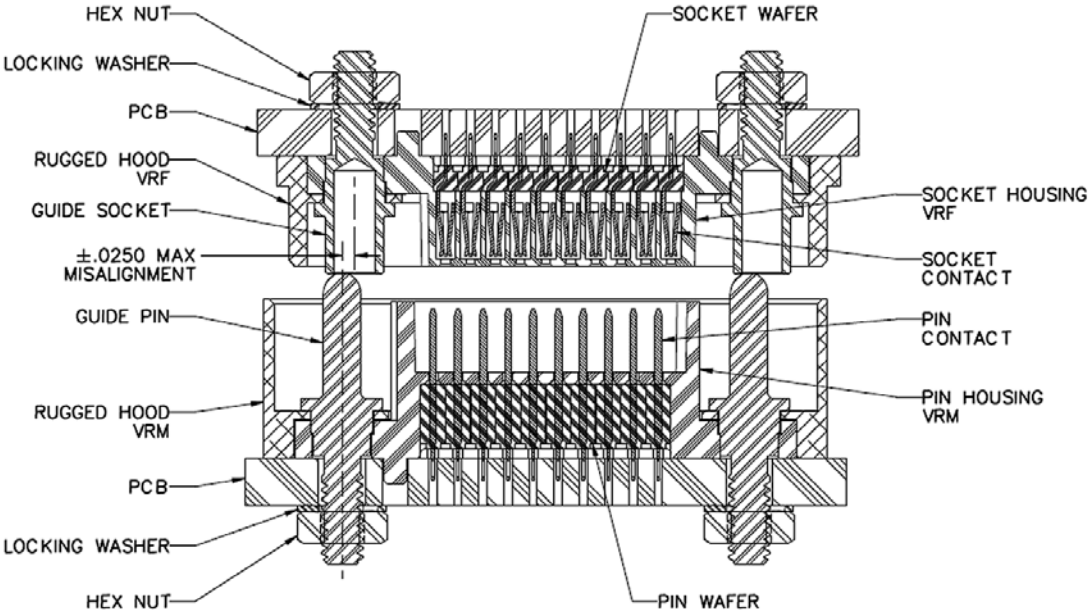

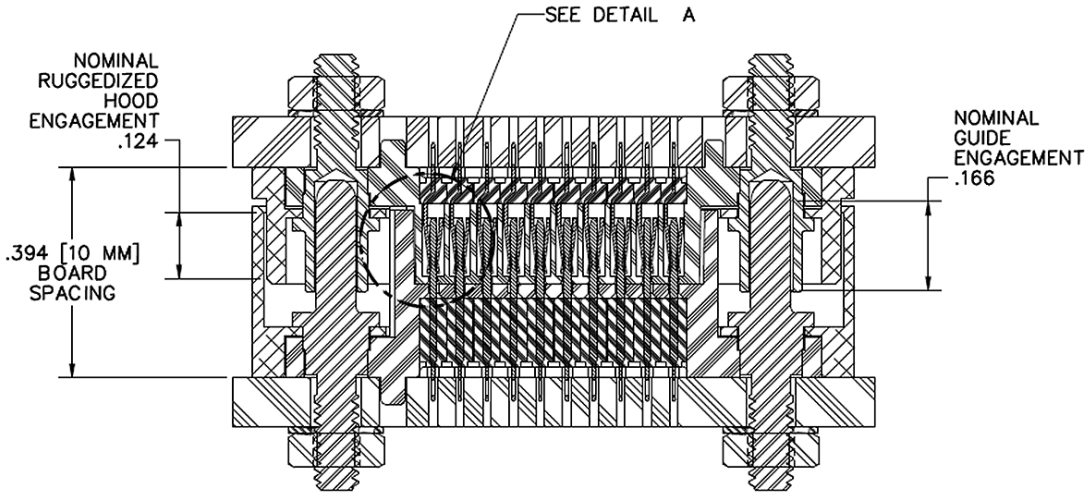

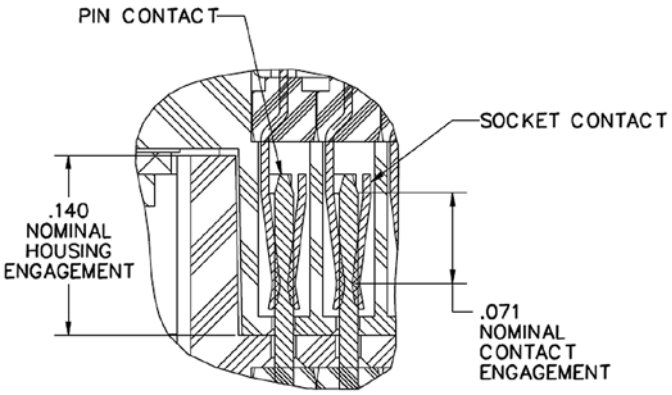

DETAIL A

NOTE: This document contains technical data whose export is governed by the U.S. Export Administration Regulations (EAR). Diversion contrary to U.S. law is prohibited.

MORE INFORMATION

www.airborn.com/products/connectors/versi-series

TECHNICAL SUPPORT

www.airborn.com/support/customer-support

AirBorn

3500 AirBorn Circle — Georgetown, TX 78626
p. 512.863.5585 www.airborn.com