227 Idema Road, Markham,
Ontario Canada, L3R 1B1
Tel: +1 416 754-3322
Fax: +1 416 754-3299
Email: info@edac.net
http://www.edac.net

EDAC

Standard Interconnect Products & Custom Engineered Solutions

516 SERIES WITH EMI SHIELD ASSEMBLY

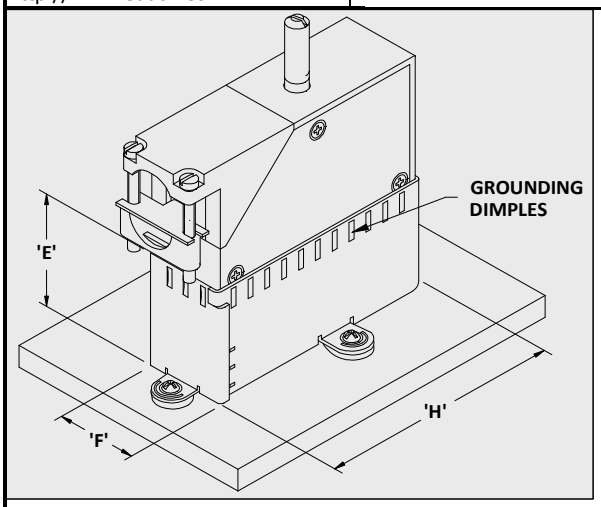

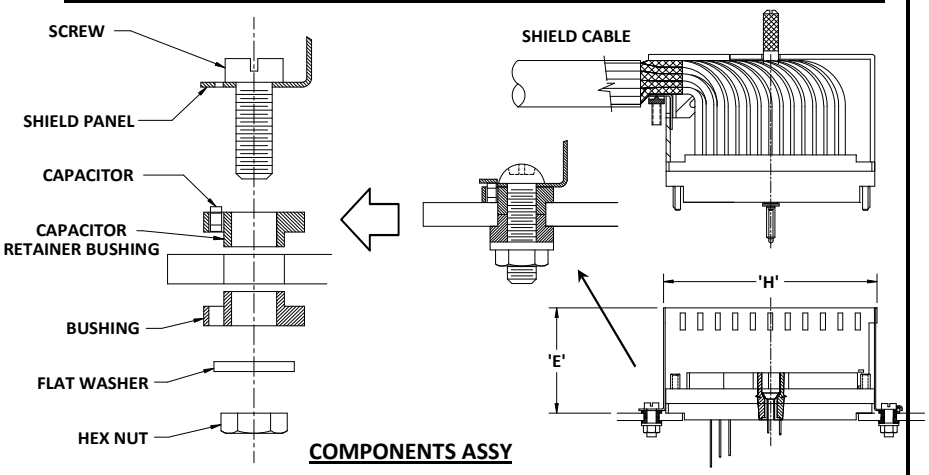

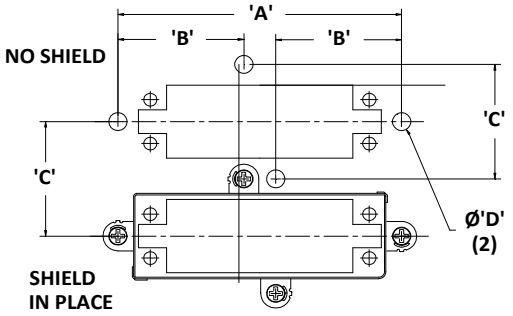

PANEL CUT-OUT AND SHIELD MOUNTING HOLES
PANEL CUT-AWAY TO CLEAR CONNECTOR

COMPONENTS ASSY

NUMBER OF CONTACTS	"A" inch (mm)	"B" inch (mm)	"C" inch (mm)	"D" inch (mm)	"E" inch (mm)	"F" inch (mm)	"H" inch (mm)
20 STANDARD 20 LOW	1.679(42.65)	.673(17.09)	1.088(27.64)		1.200(30.48) .800(20.32)	.777(19.74)	1.387(35.23)
38 STANDARD 38 LOW	2.360(59.94)	1.007(25.58)	1.258(31.96)		1.300(33.02) 1.100(27.94)	.962(24.43)	
56 STANDARD 56 LOW	2.975(75.57)	1.321(33.55)	1.258(31.96)	ø.190(ø4.83)	1.300(33.02) 1.100(27.94)	.962(24.43)	2.679(68.05)
90 STANDARD 90 LOW	3.113(79.07)	1.383(35.30)	1.606(40.79)		1.300(33.02) 1.100(27.94)	1.311(33.30)	2.802(71.17)
120 STANDARD 120 LOW	3.145(79.88)	1.406(35.71)	1.897(48.18)		1.300(33.02) 1.100(27.94)	1.607(40.82)	2.827(71.81)

516 SERIES WITH EMI SHIELDING KIT

516-236-120	516-236-138	516-236-156	516-236-190	516-236-112	516-236-220	516-236-238	516-236-256	516-236-290	516-236-212	516-236-320	516-236-338	516-236-356	516-236-390	516-236-312	516-236-420	516-236-438	516-236-456	516-236-490	516-236-412	SHIELDING KIT PART NUMBER
2					2															516-239-220 SHIELD PANEL, STD. PROFILE (SEE SHEET 2 FOR FORMING AND DIMPLING)
	2					2														516-239-238 SHIELD PANEL, STD. PROFILE (SEE SHEET 3 FOR FORMING AND DIMPLING)
		2					2													516-239-256 SHIELD PANEL, STD. PROFILE (SEE SHEET 4 FOR FORMING AND DIMPLING)
			2					2												516-239-290 SHIELD PANEL, STD. PROFILE (SEE SHEET 5 FOR FORMING AND DIMPLING)
				2					2											516-239-212 SHIELD PANEL, STD. PROFILE (SEE SHEET 6 FOR FORMING AND DIMPLING)
										2					2					516-239-219 SHIELD PANEL, LOW PROFILE (SEE SHEET 7 FOR FORMING AND DIMPLING)
											2					2				516-239-237 SHIELD PANEL, LOW PROFILE (SEE SHEET 8 FOR FORMING AND DIMPLING)
												2					2			516-239-255 SHIELD PANEL, LOW PROFILE (SEE SHEET 9 FOR FORMING AND DIMPLING)
													2					2		516-239-289 SHIELD PANEL, LOW PROFILE (SEE SHEET 10 FOR FORMING AND DIMPLING)
														2					2	516-239-211 SHIELD PANEL, LOW PROFILE (SEE SHEET 11 FOR FORMING AND DIMPLING)
					4	4	4	4	4						4	4	4	4	4	516-251-036-107 (M3 x 0.5 SCREW)
4	4	4	4	4						4	4	4	4	4						516-251-138-107 (#4-40 UNC SCREW)
4	4	4	4	4	4	4	4	4	4	4	4	4	4	4	4	4	4	4	4	516-250-200 CAPACITOR RETAINER/BUSHING
4	4	4	4	4	4	4	4	4	4	4	4	4	4	4	4	4	4	4	4	516-250-100 NYLON SHOULDER BUSHING

ORDERING GUIDE:

516 - 235 - 156

- **SERIES**
- **SHIELDING KIT IDENTIFICATION CODE**
- **COVER TYPE**

CODE	PROFILE	SCREW TYPE
1	STANDARD	UNIFIED
2	STANDARD	METRIC
3	LOW	UNIFIED
4	LOW	METRIC

- **KIT SIZE**

CODE	COVER SIZE
20	20 PIN
38	38 PIN
56	56 PIN
90	90 PIN
12	120 PIN

NOTE:
PACKAGING TO PREVENT PLATING SCRATCHES AND SCRAPES IS REQUIRED.

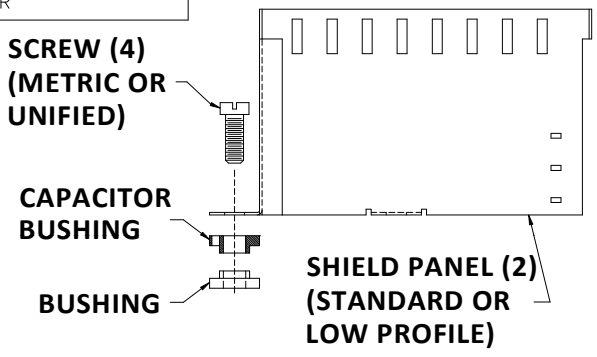

227 Idema Road, Markham,
Ontario Canada, L3R 1B1
Tel: +1 416 754-3322
Fax: +1 416 754-3299
Email: info@edac.net
http://www.edac.net

EDAC

Standard Interconnect Products & Custom Engineered Solutions

516 SERIES SHIELDED METAL COVER

ORDERING GUIDE:

5 1 6 - 2 3 5 - 1 5 6

SERIES

SHIELDED COVER IDENTIFICATION CODE

COVER TYPE

COVER SIZE

CODE	COVER SIZE
20	20 PIN
38	38 PIN
56	56 PIN
90	90 PIN
12	120 PIN

CODE	ENTRY STYLE	THREAD TAP
1	SIDE	METRIC
3	TOP	METRIC
5	SIDE	UNIFIED
7	TOP	UNIFIED

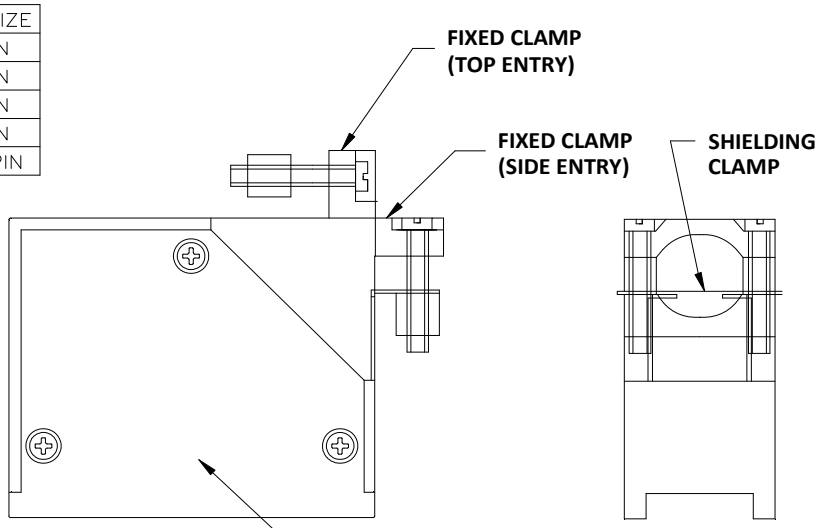

NOTE:
PACKAGING TO PREVENT PLATING SCRATCHES AND SCRAPES IS REQUIRED.

COMPONENTS CHART

SHIELDED COVER PART NUMBER																									COMPONENT PART NUMBER	
516-235-120						516-235-320	516-235-338	516-235-356	516-235-390	516-235-312		516-235-520	516-235-538	516-235-556	516-235-590	516-235-512		516-235-720	516-235-738	516-235-756	516-235-790	516-235-712				
																		1						516-234-121	UNPAINTED COVER SUB-ASSEMBLY	
																			1					516-234-139		
																				1				516-234-157		
																					1			516-234-191		
																						1		516-234-113		
												1												516-234-421		
													1											516-234-439		
														1										516-234-457		
															1									516-234-491		
																1								516-234-413		
	1																							516-234-621		
		1																						516-234-639		
			1																					516-234-657		
				1																				516-234-691		
					1																			516-234-613		
						1																		516-234-821		
							1																	516-234-839		
								1																516-234-857		
									1															516-234-891		
										1														516-234-813		
																								516-237-120	SHIELDING CLAMP	
		1	1				1	1					1	1					1	1				516-237-138		
				1					1						1						1			516-237-190		
					1					1						1						1		516-237-112		

Mouser Electronics

Authorized Distributor

Click to View Pricing, Inventory, Delivery & Lifecycle Information:

EDAC:

516-235-120 516-235-138 516-235-156 516-236-438 516-250-038-111 516-250-091-111 516-251-012-107 516-251-022-107 516-251-035-100 516-251-095-100 516-251-120-107 516-251-190-107 516-251-238-107