THIS DRAWING IS UNPUBLISHED. RELEASED FOR PUBLICATION SEP ,2004.
© COPYRIGHT 2004 By – ALL RIGHTS RESERVED.

REVISIONS

P	LTR	DESCRIPTION	DATE	DWN	APVD
	C1	REVISED PER ECN-25-339702	25AUG2025	TR	NSK

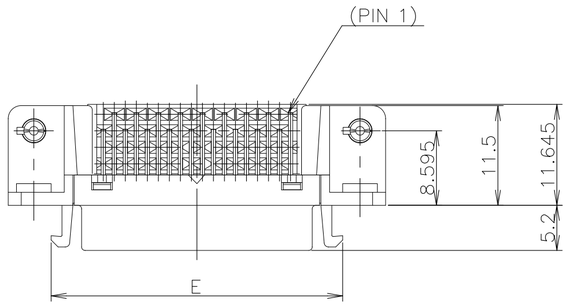

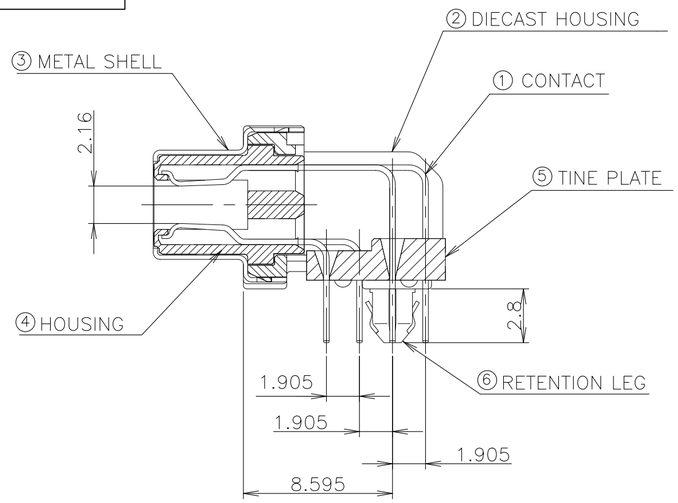

ITEM	MATERIAL	FINISH
①	COPPER ALLOY	NICKEL UNDER PLATE ALL OVER CONTACT AREA ; Au(0.3u, 0.76u) SOLDER TINE AREA ; TIN PLATE
②	ZINC	NICKEL PLATING
③	STEEL t0.25	NICKEL PLATE OVER COPPER UNDERPLATE
④ ⑤	THERMO-PLASTIC(UL:94V-0)	COLOR; BLACK
⑥	COPPER ALLOY	TIN PLATE OVER NICKEL UNDERPLATE

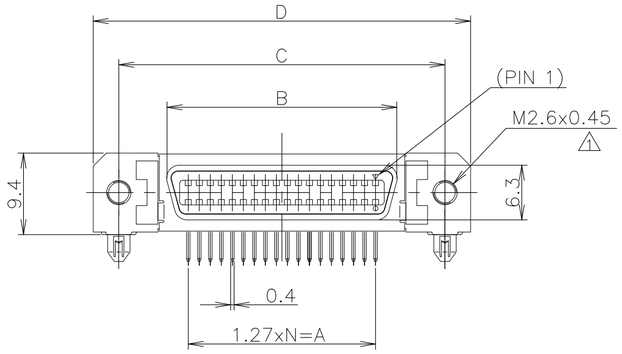

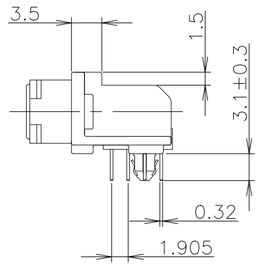

NOTES:
1. RECOMMENDED SCREW SIZE ; M2.6 PANHEAD SCREW(L=5)
2. RECOMMENDED P.C BOARD THICKNESS ; 1.6mm (REF)
3. CONNECTOR TO BE MATED;175677
4. INSERTION FORCE OF RETENTION LEG TO P.C.B; 21.56N(2.2kgf) MAX/CONNECTOR.
5. RETENTIVITY OF RETENTION LEG TO P.C.B; 4.9N(0.5kgf) MIN/CONNECTOR.

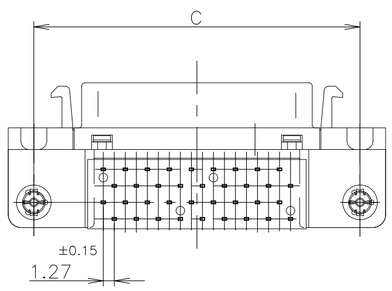

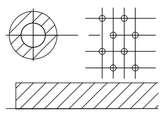

(14, 26, 50 POSN)

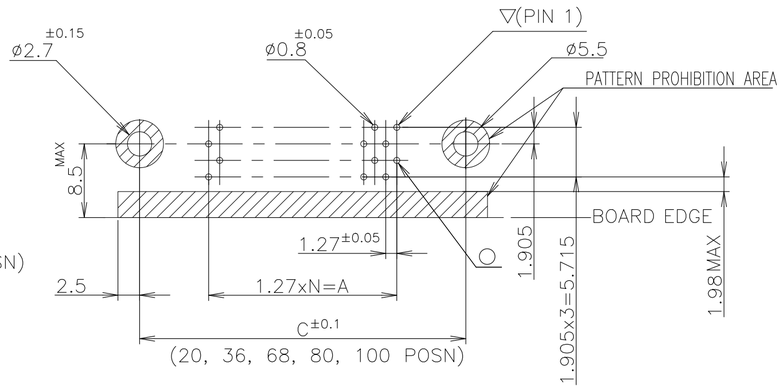

RECOMMENDED PC BOARD
MOUNTING DIMMENSION
(COMPONENT SIDE)

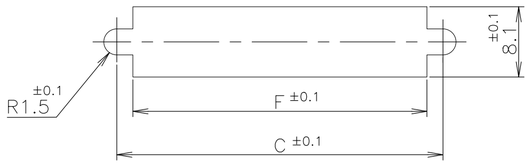

RECOMENDED PANEL CUTOUT
THK,2mm MAX

	N	F	E	D	C	B	A	Au PLT.	POSITION	PART NO.
OBSOLETED	~~39~~	~~61.9~~	~~61.55~~	~~71.45~~	~~65.55~~	~~54.53~~	~~49.53~~	~~0.76um~~	~~80~~	~~3-5178238-0~~
OBSOLETED	~~49~~	~~74.6~~	~~74.25~~	~~84.15~~	~~78.25~~	~~67.23~~	~~62.23~~	~~0.76um~~	~~100~~	~~2-5178238-9~~
OBSOLETED	~~33~~	~~54.2~~	~~53.93~~	~~63.83~~	~~57.93~~	~~46.91~~	~~41.91~~	~~0.76um~~	~~68~~	~~2-5178238-8~~
OBSOLETED	~~24~~	~~42.8~~	~~42.50~~	~~52.40~~	~~46.50~~	~~35.48~~	~~30.48~~	~~0.76um~~	~~50~~	~~2-5178238-7~~
OBSOLETED	~~17~~	~~33.9~~	~~33.61~~	~~43.51~~	~~37.61~~	~~26.59~~	~~21.59~~	~~0.76um~~	~~36~~	~~2-5178238-5~~
	12	27.6	27.26	37.16	31.26	20.24	15.24	0.76um	26	2-5178238-4
	9	23.8	23.45	33.35	27.45	16.43	11.43	0.76um	20	2-5178238-2
	6	19.9	19.64	29.54	23.64	12.62	7.62	0.76um	14	2-5178238-1
OBSOLETED	~~39~~	~~61.9~~	~~61.55~~	~~71.45~~	~~65.55~~	~~54.53~~	~~49.53~~	~~0.3 um~~	~~80~~	~~1-5178238-0~~
OBSOLETED	~~49~~	~~74.6~~	~~74.25~~	~~84.15~~	~~78.25~~	~~67.23~~	~~62.23~~	~~0.3 um~~	~~100~~	~~5178238-9~~
OBSOLETED	~~33~~	~~54.2~~	~~53.93~~	~~63.83~~	~~57.93~~	~~46.91~~	~~41.91~~	~~0.3 um~~	~~68~~	~~5178238-8~~
	24	42.8	42.50	52.40	46.50	35.48	30.48	0.3 um	50	5178238-7
OBSOLETED	~~17~~	~~33.9~~	~~33.61~~	~~43.51~~	~~37.61~~	~~26.59~~	~~21.59~~	~~0.3 um~~	~~36~~	~~5178238-5~~
	12	27.6	27.26	37.16	31.26	20.24	15.24	0.3 um	26	5178238-4
	9	23.8	23.45	33.35	27.45	16.43	11.43	0.3 um	20	5178238-2
	6	19.9	19.64	29.54	23.64	12.62	7.62	0.3 um	14	5178238-1

5178238

LEAD FREE

THIS DRAWING IS A CONTROLLED DOCUMENT.

DIMENSIONS: mm

TOLERANCES UNLESS OTHERWISE SPECIFIED:
0 PLC ± 0.2
1 PLC ± 0.2
2 PLC ± 0.2
3 PLC ± 0.2
4 PLC ± 0.2
ANGLES ± 3°

MATERIAL: SEE TABLE
FINISH: SEE TABLE

DWN T.KAWAMAE 13DEC04
CHK I.ENOMOTO 13DEC04
APVD I.ENOMOTO 13DEC04
PRODUCT SPEC 108-5288
APPLICATION SPEC
WEIGHT ~~0.000000~~
CUSTOMER DRAWING

TE Connectivity Ltd.

NAME
RECEPTACLE HDR ASSY (3.1mm)
RETENTION LEG TYPE
STANDARD CHAMP.050 SERIES (II)

SIZE A2 | CAGE CODE 00779 | DRAWING NO C-5178238 | RESTRICTED TO
SCALE 2:1 | SHEET 1 OF 1 | REV C1

1471-9 (1/15)