CHIP NOISE FILTER for Consumer equipment & Industrial equipment NFZ5BBW□□□LN10□ REFERENCE SPECIFICATION

1. Scope

This reference specification applies to NFZ5BBW_LN10L series.

1.1 Specific applications:

・Power equipment: Products that can be used in power equipment such as renewable energy equipment, energy storage equipment and EV charging equipment and whose functions are not directly related to the protection of human life and property.
・Industrial equipment: Products that can be used in industrial equipment such as base stations, manufacturing equipment, industrial robotics equipment, and measurement equipment, and whose functions do not directly relate to the protection of human life and property.
・Medical equipment (GHTF Class C) *Except for implant/surgery/auto injector: Products that can be used for medical equipment of Class C of the international classification class GHTF and whose malfunction is considered to pose a relatively high risk to the human body.
・Medical equipment (GHTF Class A and B): Products that can be used for medical equipment regulated by Class A and Class B of the international classification class GHTF and whose functions do not directly relate to the protection of human life and property.
・Consumer equipment: Products that can be used in consumer equipment such as home appliances, audio/visual equipment, communication equipment, information equipment, office equipment, and household robotics, and whose functions are not directly related to the protection of human life and property.

1.2 Unsuitable application:

Applications listed in “Limitation of applications” in this reference specification.
WE DISCLAIM ANY LOSS AND DAMAGES ARISING FROM OR IN CONNECTION WITH THE PRODUCTS INCLUDING BUT NOT LIMITED TO THE CASE SUCH LOSS AND DAMAGES CAUSED BY THE UNEXPECTED ACCIDENT, IN EVENT THAT THE PRODUCT IS APPLIED FOR THE PURPOSE WHICH IS SPECIFIED ABOVE AS THE UNSUITABLE APPLICATION FOR THE PRODUCT.

2.Part Numbering

(ex)	NF	Z	5B	BW	2R9	L	N	1	0	L
	Product ID	Structure	Dimension (L×W)	Features	Impedance	Performance	Category	Numbers of Circuit	Other	Packaging L:Taping

3.Rating

•Operating Temperature Range.(Ambient temperature; Self-temperature rise is not included) -40 to +105°C
(Product temperature; Self- temperature rise is included) -40 to +125°C
•Storage Temperature Range. -40 to +105°C

Customer Part Number	MURATA Part Number	Impedance at 1MHz (Ω)	Impedance at 1MHz Tolerance (%)	DC Resistance (Ω)	*1 Rated Current(mA) *2 Ambient temperature 85°C	*1 Rated Current(mA) *3 Ambient temperature 105°C
	NFZ5BBW2R9LN10L	2.9	±30	0.012±20%	4000	2050
	NFZ5BBW2R9LN10K					
	NFZ5BBW4R5LN10L	4.5		0.015±20%	3400	1800
	NFZ5BBW4R5LN10K					
	NFZ5BBW6R7LN10L	6.7		0.019±20%	3100	1680
	NFZ5BBW6R7LN10K					
	NFZ5BBW7R6LN10L	7.6		0.019±20%	3100	1680
	NFZ5BBW7R6LN10K					
	NFZ5BBW100LN10L	10		0.024±20%	3000	1630
	NFZ5BBW100LN10K					
	NFZ5BBW140LN10L	14		0.030±20%	2600	1370
	NFZ5BBW140LN10K					

Customer Part Number	MURATA Part Number	Impedance at 1MHz (Ω)	Impedance at 1MHz Tolerance (%)	DC Resistance (Ω)	*1 Rated Current(mA) *2 Ambient temperature 85°C	*1 Rated Current(mA) *3 Ambient temperature 105°C
	NFZ5BBW170LN10L	17	±30	0.035±20%	2500	1230
	NFZ5BBW170LN10K					
	NFZ5BBW220LN10L	22		0.044±20%	2300	1210
	NFZ5BBW220LN10K					
	NFZ5BBW310LN10L	31		0.058±20%	2000	1090
	NFZ5BBW310LN10K					
	NFZ5BBW450LN10L	45		0.083±20%	1650	1020
	NFZ5BBW450LN10K					
	NFZ5BBW520LN10L	52		0.100±20%	1610	1010
	NFZ5BBW520LN10K					
	NFZ5BBW610LN10L	61		0.106±20%	1600	1000
	NFZ5BBW610LN10K					
	NFZ5BBW970LN10L	97		0.187±20%	1200	700
	NFZ5BBW970LN10K					
	NFZ5BBW141LN10L	140		0.259±20%	1050	600
	NFZ5BBW141LN10K					

*1: As for the rated current, rated current derated as figure.1 depending on the operating temperature.
*2: When applied rated current to the Products, temperature rise caused by self heating will be 40°C or less.
*3: When applied rated current to the Products, temperature rise caused by self heating will be 20°C or less.

Fugure. 1

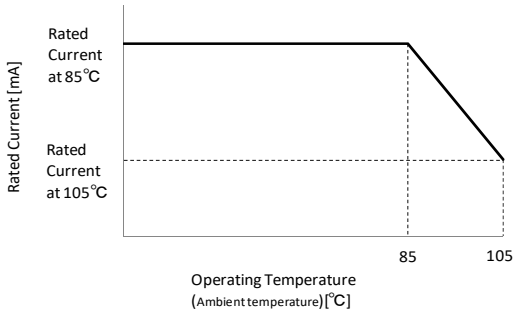

4. Testing Conditions

《Unless otherwise specified》
Temperature : Ordinary Temperature (15 to 35°C)
Humidity : Ordinary Humidity (25 to 85 %(RH))

《In case of doubt》
Temperature : 20 ± 2°C
Humidity : 60 to 70 %(RH)
Atmospheric Pressure : 86 to 106 kPa

5.Appearance and Dimensions

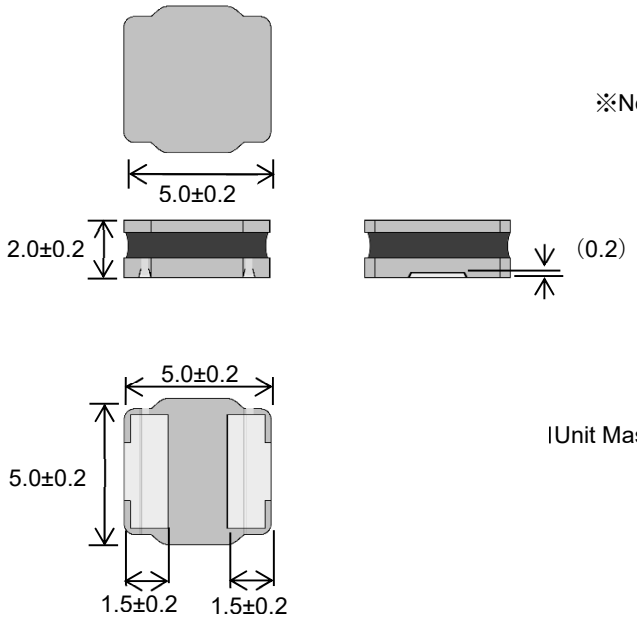

※No Marking

Unit Mass（Typical value）

0.22 g

6.Electrical Performance

No.	Item	Specification	Test Method
6.1	Impedance	Impedance shall meet item 3.	Measuring Equipment : Keysight 4284A or equivalent Measuring Frequency: 1MHz
6.2	DC Resistance	DC Resistance shall meet item 3.	Measuring Equipment: Digital multi meter

7.Mechanical Performance

No.	Item	Specification	Test Method
7.1	Shear Test	Chip Noise Filter shall not be damaged.	Substrate: Glass-epoxy substrate Force: 10N Hold Duration: 5±1s 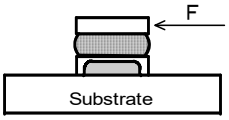
7.2	Bending Test	Chip Noise Filter shall not be damaged.	Substrate: Glass-epoxy substrate (100×40×1.6mm) Speed of Applying Force: 0.5mm / s Deflection: 2mm Hold Duration: 5s 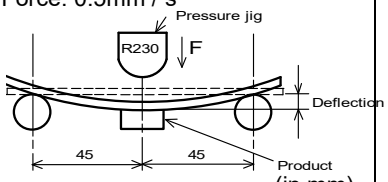 (in mm)
7.3	Vibration	Chip Noise Filter shall not be damaged.	Oscillation Frequency : 10 to 2000 to 10Hz for 20 min Total amplitude : 1.5 mm or Acceleration amplitude 98 m/s^2 whichever is smaller. Testing Time: A period of 2 hours in each of 3 mutually perpendicular directions. (Total 6 hours)
7.4	Solderability	The wetting area of the electrode shall be at least 90% covered with new solder coating.	Flux: Ethanol solution of rosin,25(wt)% (Immersed for 5s to 10s) Solder : Sn-3.0Ag-0.5Cu Pre-Heating: 150±10°C / 60 to 90s Solder Temperature: 240±5°C Immersion Time: 3±1 s

No.	Item	Specification	Test Method
7.5	Resistance to Soldering Heat	Appearance: No damage Impedance Change: within ± 10%	Flux: Ethanol solution of rosin,25(wt)% (Immersed for 5s to 10s) Solder : Sn-3.0Ag-0.5Cu Pre-Heating: 150±10°C / 60 to 90s Solder Temperature: 270±5°C Immersion Time: 10±1 s Then measured after exposure in the room condition for 24±2 hours.

8.Environmental Performance (It shall be soldered on the substrate.)

No.	Item	Specification	Test Method
8.1	Heat Resistance	Appearance: No damage Impedance Change: within ± 10% DC Resistance Change: within ±10%	Temperature: 105±2°C Time: 1000± $^{48}_{0}$ hours Then measured after exposure in the room condition for 24±2 hours.
8.2	Cold Resistance		Temperature: -40±2°C Time: 1000± $^{48}_{0}$ hours Then measured after exposure in the room condition for 24±2 hours.
8.3	Humidity		Temperature: 40±2°C Humidity: 90~95%(RH) Time: 1000± $^{48}_{0}$ hours Then measured after exposure in the room condition for 24±2 hours.
8.4	Temperature Cycle		1 cycle: 1 step: -40±2°C / 30±3 min 2 step: Ordinary temp. / 10 to 15 min 3 step: +105±2°C / 30±3 min 4 step: Ordinary temp. / 10 to 15 min Total of 10 cycles Then measured after exposure in the room condition for 24±2 hours.

9. Specification of Packaging

9.1 Appearance and Dimensions of plastic tape

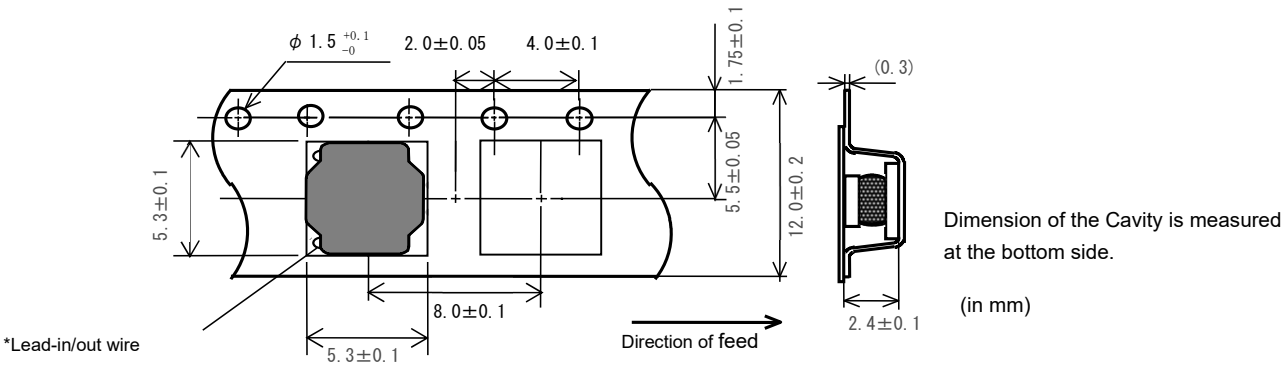

9.2 Specification of Taping

(1) Packing quantity (standard quantity)
φ180 mm reel : 500 pcs. / reel
φ330 mm reel : 3000 pcs. / reel

(2) Packing Method
Products shall be packed in the each embossed cavity of plastic tape and sealed by cover tape.

(3) Sprocket hole
The sprocket holes are to the right as the tape is pulled toward the user.

(4) Spliced point
Plastic tape and Cover tape has no spliced point.

(5) Missing components number
Missing components number within 0.025 % of the number per reel or 1 pc., whichever is greater, and are not continuous. The specified quantity per reel is kept.

9.3 Pull Strength

Embossed carrier tape	10N min.
Cover tape	5N min.

9.4 Peeling off force of cover tape

Speed of Peeling off	300mm/min
Peeling off force	0.2 to 0.7N (minimum value is typical)

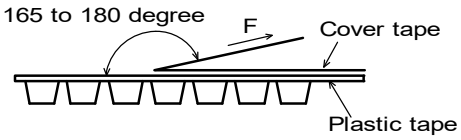

9.5 Dimensions of Leader-tape, Trailer and Reel

There shall be leader-tape (cover tape) and trailer-tape (empty tape) as follows.

« Packaging Code : L (ϕ180mm reel) »

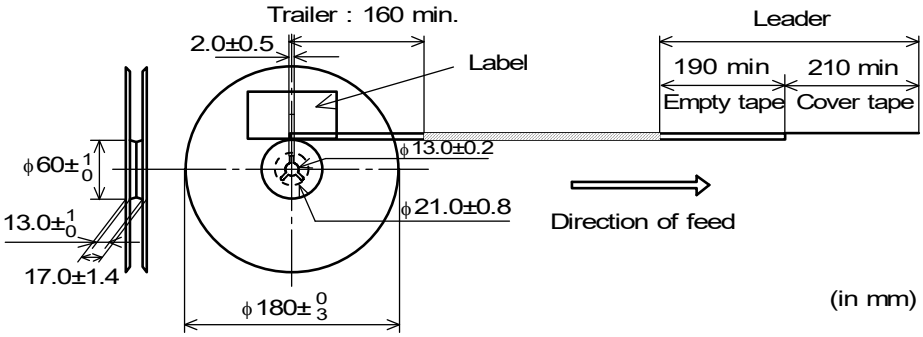

« Packaging Code : K (ϕ330mm reel) »

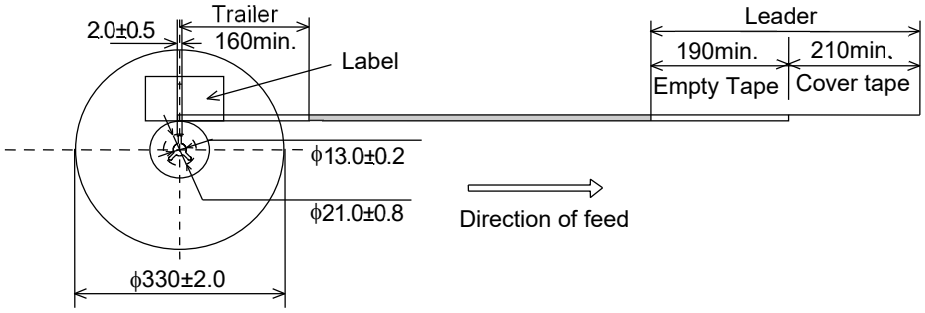

9.6 Marking for reel

Customer part number, MURATA part number, Inspection number(∗1) , RoHS marking (∗2), Quantity etc ･･･

∗1) « Expression of Inspection No. » □□ OOOO ×××
(1) (2) (3)

(1) Factory Code
(2) Date
First digit : Year / Last digit of year
Second digit : Month / Jan. to Sep. → 1 to 9, Oct. to Dec. → O, N, D
Third, Fourth digit : Day
(3) Serial No.

∗2) « Expression of RoHS marking » ROHS – Y (△)
(1) (2)

(1) RoHS regulation conformity parts.
(2) MURATA classification number

9.7 Marking for Outside package (corrugated paper box)

Customer name, Purchasing order number, Customer part number, MURATA part number, RoHS marking (∗2) ,Quantity, etc ･･･

9.8. Specification of Outer Case

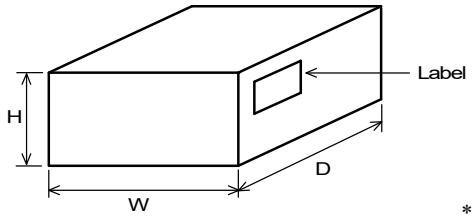

Reel	Outer Case Dimensions (mm)			Standard Reel Quantity in Outer Case (Reel)
	W	D	H	
ϕ180mm	186	186	93	5
ϕ330mm	340	340	95	5

∗ Above Outer Case size is typical. It depends on a quantity of an order.

10 . ⚠ Caution

10.1 Limitation of applications

The products listed in the reference specification (hereinafter the product(s) is called as the “Product(s)”) are designed and manufactured for applications specified in the reference specification (hereinafter called as the “Specific Application”).

We shall not warrant anything in connection with the Products including fitness, performance, adequateness, safety, or quality, in the case of applications listed in from (1) to (11) written at the end of this precautions, which may generally require high performance, function, quality, management of production or safety. Therefore, the Product shall be applied in compliance with the specific application.

WE DISCLAIM ANY LOSS AND DAMAGES ARISING FROM OR IN CONNECTION WITH THE PRODUCTS INCLUDING BUT NOT LIMITED TO THE CASE SUCH LOSS AND DAMAGES CAUSED BY THE UNEXPECTED ACCIDENT, IN EVENT THAT (i) THE PRODUCT IS APPLIED FOR THE PURPOSE WHICH IS NOT SPECIFIED AS THE SPECIFIC APPLICATION FOR THE PRODUCT, AND/OR (ii) THE PRODUCT IS APPLIED FOR ANY FOLLOWING APPLICATION PURPOSES FROM (1) TO (11) (EXCEPT THAT SUCH APPLICATION PURPOSE IS UNAMBIGUOUSLY SPECIFIED AS SPECIFIC APPLICATION FOR THE PRODUCT IN OUR CATALOG SPECIFICATION FORMS, DATASHEETS, OR OTHER DOCUMENTS OFFICIALLY ISSUED BY US*).

(1) Aircraft equipment
(2) Aerospace equipment
(3) Undersea equipment
(4) Power plant control equipment
(5) Medical equipment
(6) Transportation equipment
(7) Traffic control equipment
(8) Disaster prevention/security equipment
(9) Industrial data-processing equipment
(10) Combustion/explosion control equipment
(11) Equipment with complexity and/or required reliability equivalent to the applications listed in the above.

For exploring information of the Products which will be compatible with the particular purpose other than those specified in the reference specification , please contact our sales offices, distribution agents, or trading companies with which you make a deal, or via our web contact form.

Contact form: https://www.murata.com/contactform

* We may design and manufacture particular Products for applications listed in (1) to (11). Provided that, in such case we shall unambiguously specify such Specific Application in the reference specification without any exception. Therefore, any other documents and/or performances, whether exist or non-exist, shall not be deemed as the evidence to imply that we accept the applications listed in (1) to (11).

10.2 Corrosive gas

Please refrain from use since contact with environments with corrosive gases (sulfur gas [hydrogen sulfide, sulfur dioxide, etc.], chlorine, ammonia, etc.) or oils (cutting oil, silicone oil, etc.) that have come into contact with the previously stated corrosive gas environment will result in deterioration of product quality or an open from deterioration due

11. Notice

This product is designed for solder mounting.
Please consult us in advance for applying other mounting method such as conductive adhesive.

11.1 Land pattern designing

Recommended land pattern for flow and reflow soldering is as follows:
It has been designed for Electric characteristics and solderability.
Please follow the recommended patterns. Otherwise, their performance which includes electrical performance or solderability may be affected, or result to "position shift" in soldering process.

(Land pattern for Reflow soldering)

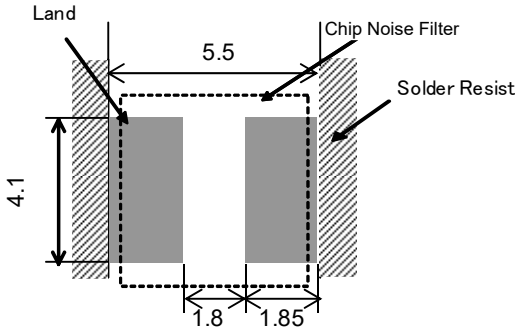

(Land pattern for Flow soldering)

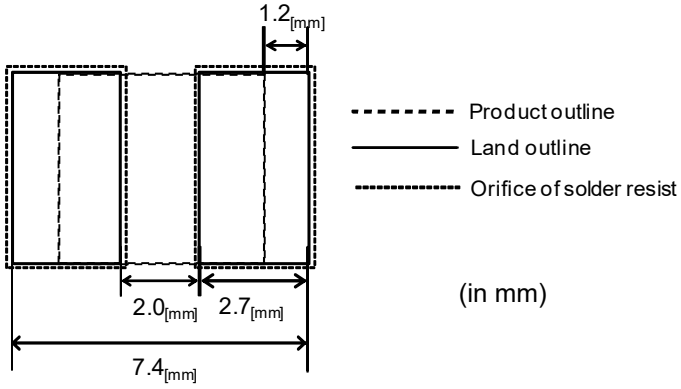

11.2 Flux, Solder

Flux	・Use rosin-based flux. ・Don't use highly acidic flux with halide content exceeding 0.2(wt)% (chlorine conversion value). ・Don't use water-soluble flux.
Solder	・Use Sn-3.0Ag-0.5Cu solder ・Standard thickness of solder paste : 100μm to 150μm

Other flux (except above) Please contact us for details, then use.

11.3 Flow soldering conditions / Reflow soldering conditions

- Pre-heating should be in such a way that the temperature difference between solder and product surface is limited to 100°C max. Cooling into solvent after soldering also should be in such a way that the temperature difference is limited to 100°C max.
  Insufficient pre-heating may cause cracks on the product, resulting in the deterioration of product quality.
- Standard soldering profile and the limit soldering profile is as follows.
  The excessive limit soldering conditions may cause leaching of the electrode and / or resulting in the deterioration of product quality.

(1)Flow soldering profile

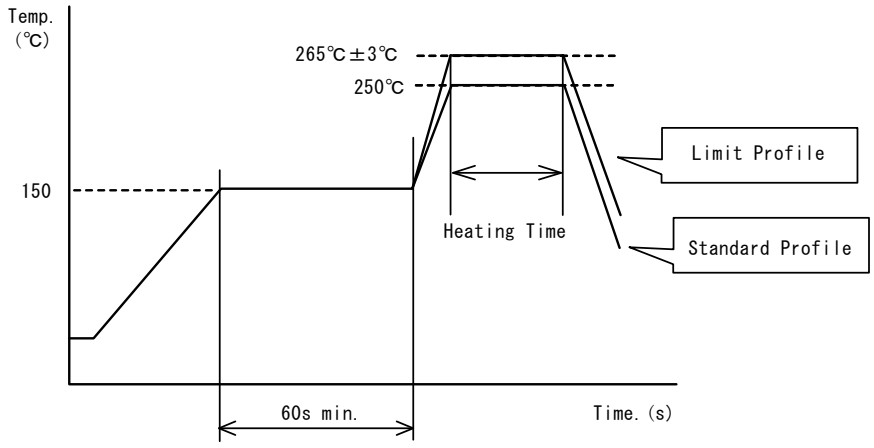

	Standard Profile	Limit Profile
Pre-heating	150°C、60s min.	
Heating	250°C、4s～6s	265°C±3°C、5s
Cycle of flow	2 times	1 time

(2)Reflow soldering profile

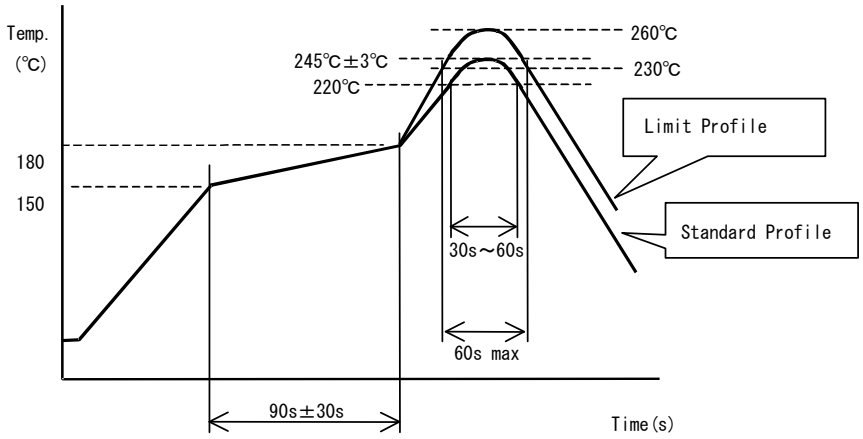

	Standard Profile	Limit Profile
Pre-heating	150～180°C 、90s±30s	
Heating	above 220°C、30s～60s	above 230°C、60s max.
Peak temperature	245±3°C	260°C,10s
Cycle of reflow	2 times	2 times

11.4 Reworking with soldering iron.

The following conditions must be strictly followed when using a soldering iron.

Pre-heating	150°C,1 min
Tip temperature	380°C max.
Soldering iron output	80W max.
Tip diameter	φ3mm max.
Soldering time	3 (+1,-0)s
Times	2 times

Note :Do not directly touch the products with the tip of the soldering iron in order to prevent the crack on the products due to the thermal shock.

11.5 Solder Volume

・Adhesive application of flow is recommended the 3-point application.（prevent the drop of products）

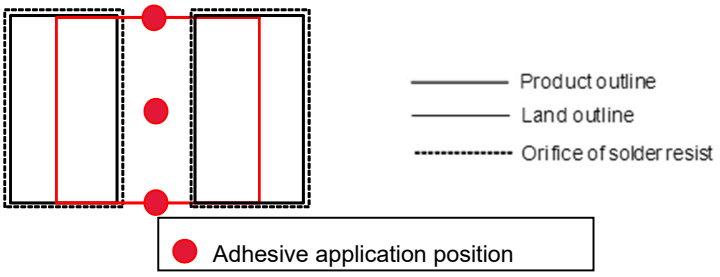

・Amount of adhesive applied is a standard 1/2 to 2/3 of the bottom flange thickness.

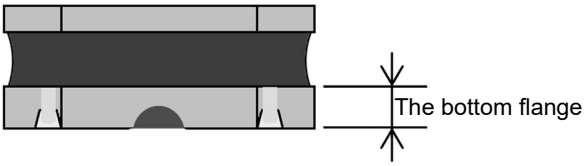

11.6 Product's location

The following shall be considered when designing and laying out P.C.B.'s.

(1) P.C.B. shall be designed so that products are not subject to the mechanical stress due to warping the board.

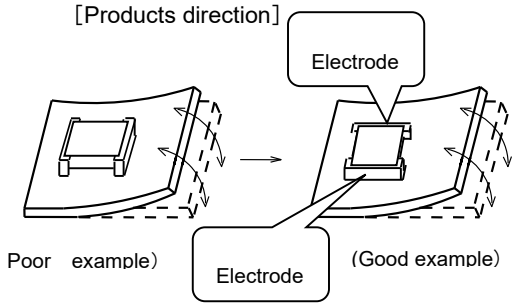

Products shall be located in the sideways direction (Length:a<b) to the mechanical stress.

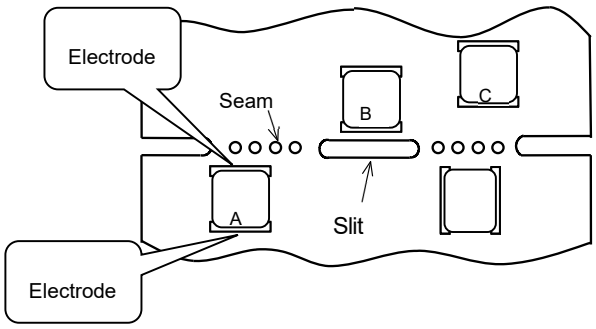

(2) Products location on P.C.B. separation

Products (A,B,C,D) shall be located carefully so that products are not subject to the mechanical stress due to warping the board. Because they may be subjected the mechanical stress in order of A>C>B ≅ D.

11.7 Cleaning Conditions

Products shall be cleaned on the following conditions.

(1) Cleaning temperature shall be limited to 60°C max.(40°C max for IPA.)

(2) Ultrasonic cleaning shall comply with the following conditions with avoiding the resonance phenomenon at the mounted products and P.C.B.

Power : 20 W / l max. Frequency : 28kHz to 40kHz Time : 5 minutes max.

(3) Cleaner

1. Alternative cleaner
   - Isopropyl alcohol (IPA)
2. Aqueous agent
   - PINE ALPHA ST-100S

(4) There shall be no residual flux and residual cleaner after cleaning.
In the case of using aqueous agent, products shall be dried completely after rinse with de-ionized water in order to remove the cleaner.

(5) Other cleaning
Please contact us.

11.8 Resin coating

The impedance value may change due to high cure-stress of resin to be used for coating/molding products. An open circuit issue may occur by mechanical stress caused by the resin, amount/cured shape of resin, or operating condition etc. Some resin contains some impurities or chloride possible to generate chlorine by hydrolysis under some operating condition may cause corrosion of wire, leading to open circuit. So, please pay your careful attention when you select resin in case of coating/molding the products with the resin.Prior to use the coating resin, please make sure no reliability issue is observed by evaluating products mounted on your board.

11.9 Caution for use

- Sharp material such as a pair of tweezers or other material such as bristles of cleaning brush, shall not be touched to the winding portion to prevent the breaking of wire.
- Mechanical shock should not be applied to the products mounted on the board to prevent the breaking of the core.

11.10 Handling of a substrate

After mounting products on a substrate, do not apply any stress to the product caused by bending or twisting to the substrate when cropping the substrate, inserting and removing a connector from the substrate or tightening screw to the substrate.
Excessive mechanical stress may cause cracking in the product.

Bending

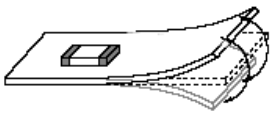

Twisting

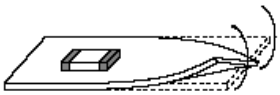

11.11 Storage and Handling Requirements

(1) Storage period

Use the products within 12 months after delivered.
Solderability should be checked if this period is exceeded.

(2) Storage conditions

- Products should be stored in the warehouse on the following conditions.

  Temperature : -10 ~ 40°C
  Humidity : 15 to 85% relative humidity No rapid change on temperature and humidity

  The electrode of the products is coated with solder. Don't keep products in corrosive gases such as sulfur, chlorine gas or acid, or it may cause oxidization of electrode, resulting in poor solderability.
- Products should not be stored on bulk packaging condition to prevent the chipping of the core and the breaking of winding wire caused by the collision between the products.
- Products should be stored on the palette for the prevention of the influence from humidity, dust and so on.
- Products should be stored in the warehouse without heat shock, vibration, direct sunlight and so on.

(3) Handling Condition

Care should be taken when transporting or handling product to avoid excessive vibration or mechanical shock.

12. ⚠ Note

(1) Please make sure that your product has been evaluated in view of your specifications with our product being mounted to your product.

(2) You are requested not to use our product deviating from the reference specifications.

(3) The contents of this reference specification are subject to change without advance notice. Please approve our product specifications or transact the approval sheet for product specifications before ordering.