Nov.1.2025 Copyright 2025 HIROSE ELECTRIC CO., LTD. All Rights Reserved.
In case of consideration for using Automotive equipment / device which demand high reliability, kindly contact our sales window correspondents.

MATED PLUG(REFERENCE)

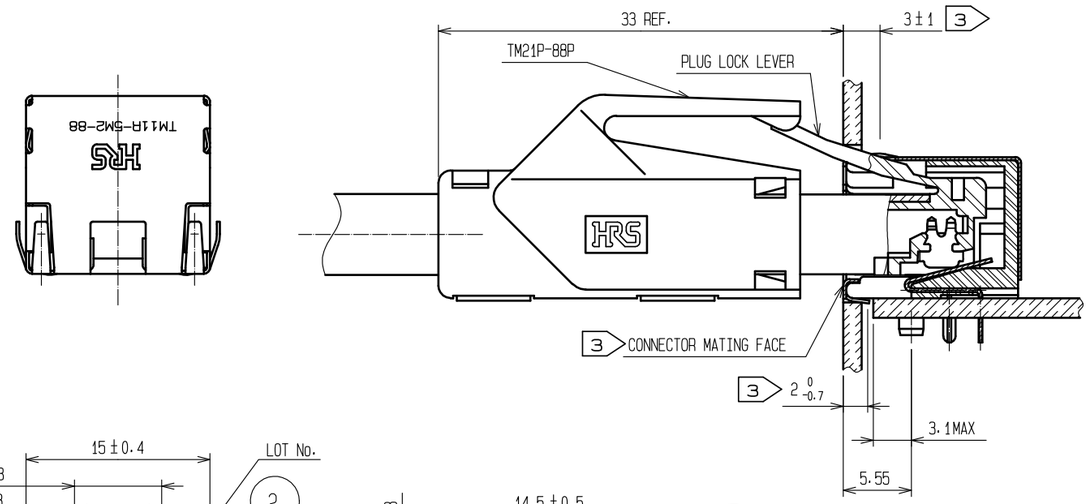

PCB PATTERN(REFERENCE)

MOUNTING SIDE(t=1.6)

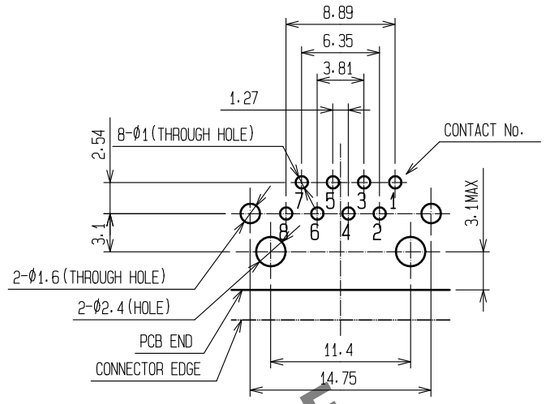

PATTERN/GROUND PROHIBITION AREA

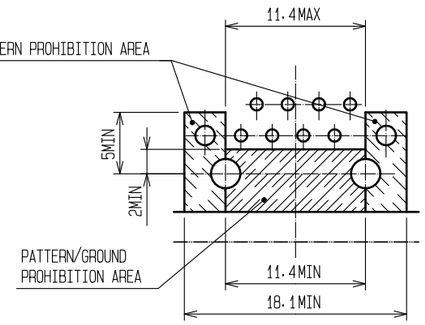

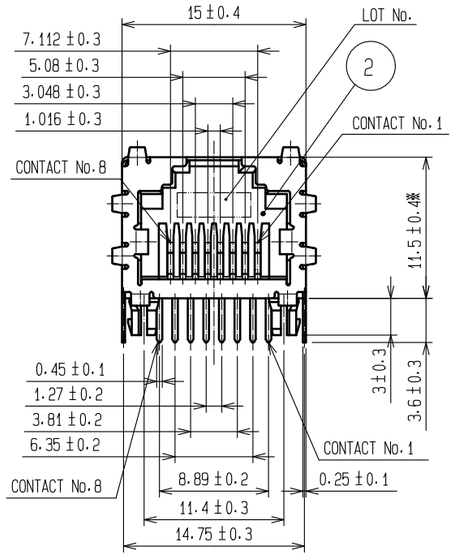

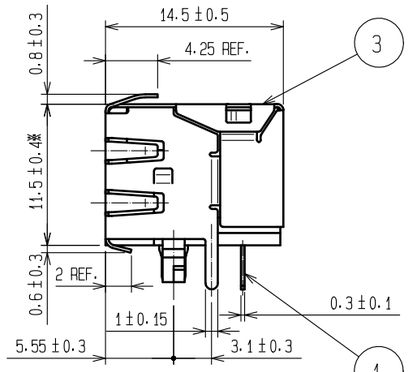

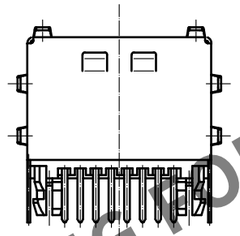

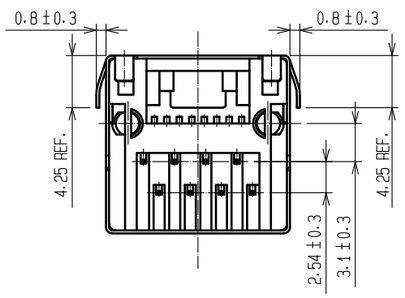

4 FIGURE FOR PACKING(FREE)

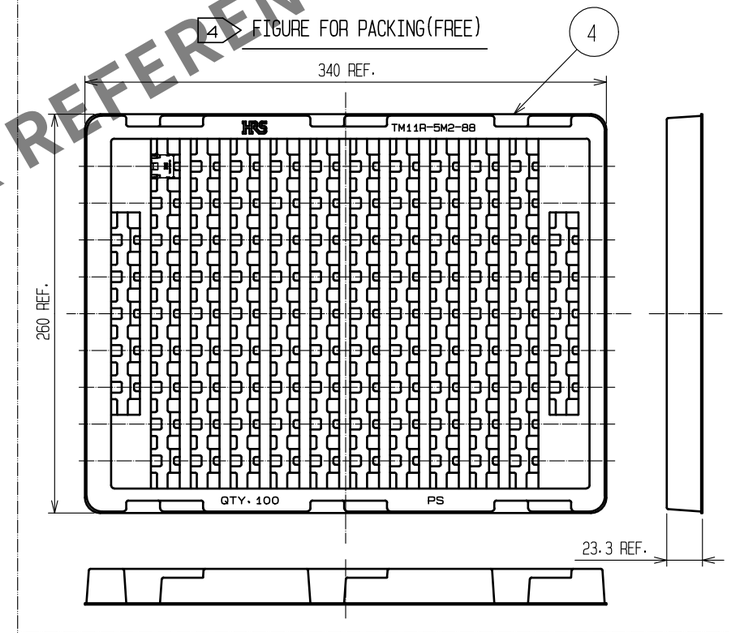

PANEL CUT OUT(REFERENCE)

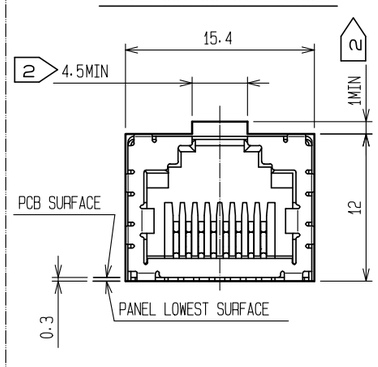

NOTE 1 THIS PART IS THE MODULAR JACK WHICH SATISFIED THE PERFORMANCE OF CATEGORY 5 IN 1,2-3,6 PAIR , AND IS SUPPORTING TRANSMISSION OF FAST ETHERNET(100BASE-TX). APPLICABLE PLUG CONNECTOR:TM21P-88P.

2 NOTCH IN ACCORDANCE WITH THE DIMENSION FOR PLUG LOCK LEVER SPACE WHEN MANUFACTURING PANEL.

3 CONTACT POSITIONS OF OUTER SHIELD SPRINGS SEEING FROM FRONT VIEW ARE AS SHOWN BELOW FOR YOUR REFERENCE OF PANEL LOCATION.
UPPER AND SIDE:3±1 LOWER:2 -0.7

4 TO BE PACKED IN TRAY:100pcs/TRAY.

2 5 DO NOT MATE WITH THE PLUG NONCONFORMING TO FCC STANDARD.
TAKE EXTRA CARE TO THE CONTACT LOCATION SHOWN IN THE FIGURE.

6 ※INDICATES DUPLICATED DIMENSION.

7 THERE IS A POSSIBILITY THAT PART NO. 3 CAN BE SCRATCHED DURING THE MANUFACTURING OR TRANSPORTATION PROCESS. HOWEVER, THIS WILL NOT CAUSE ANY PROBLEMS TO THE PRODUCT PERFORMANCE.

5 FCC PLUG DIMENSION

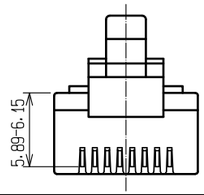

NO.	MATERIAL	FINISH , REMARKS	NO.	MATERIAL	FINISH , REMARKS
1	Phosphor Bronze	Contact area :gold plating 1.3μm min Lead area :tin reflow plating 1μm min Under :nickel plating 1μm min	3	Brass	Over :tin reflow plating 1μm min Under :copper plating 0.3μm min
			2	PBT	UL94V-0(Black)

UNITS	SCALE	COUNT	DESCRIPTION OF REVISIONS	DESIGNED	CHECKED	DATE
mm	2 : 1	2 1	DIS-E-00007453	KIM JAEHYEON	KG. OKITA	20211108

HRS HIROSE ELECTRIC CO., LTD.

APPROVED	: MN. KENJO	20200407	DRAWING NO.	EDC-123343-70-00
CHECKED	: TU. TANIGUCHI	20200407	PART NO.	TM11R-5M2-88(70)
DESIGNED	: KIM JAEHYEON	20200407	CODE NO.	CL0222-2906-2-70
DRAWN	: DS. HIROWATARI	20200407		2 1/1

HRS DRAWING FOR REFERENCE