Sep.1.2025 Copyright 2025 HIROSE ELECTRIC CO., LTD. All Rights Reserved.
In case of consideration for using Automotive equipment / device which demand high reliability, kindly contact our sales window correspondents.

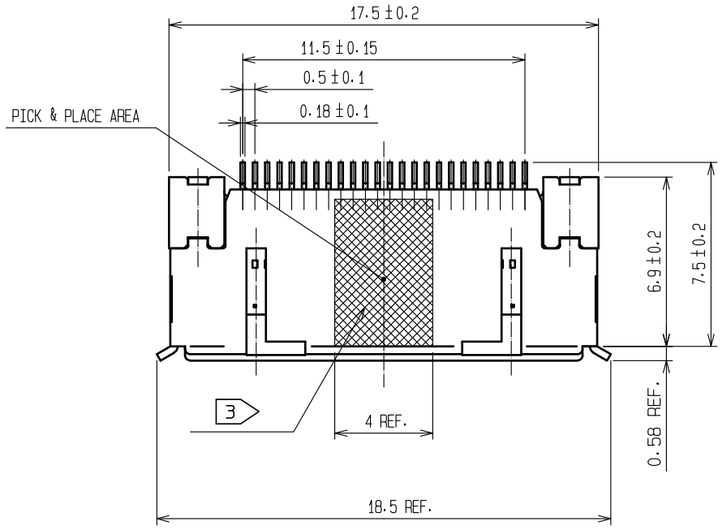

PATTERN OF MOUNTING PLUG (2:1)

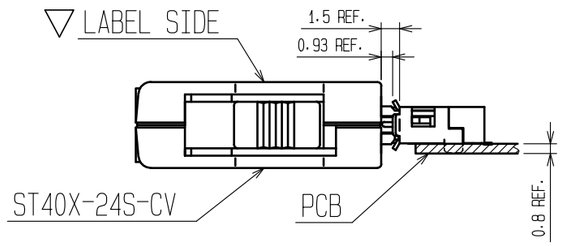

RECOMMENDED PC BOARD HOLE PATTERN (2:1)

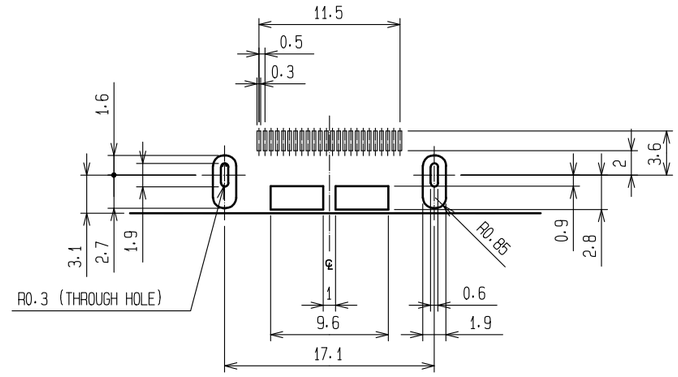

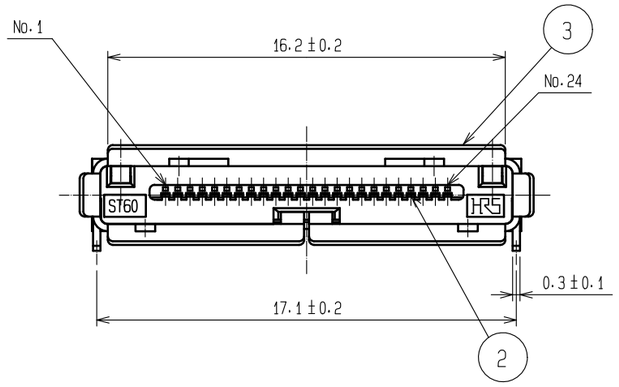

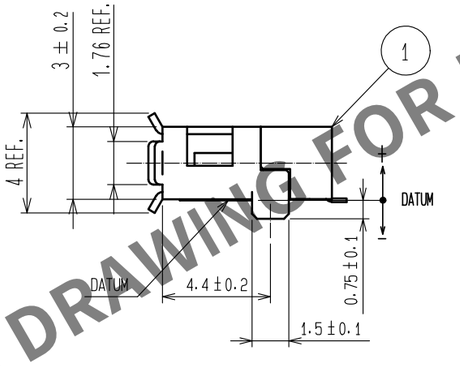

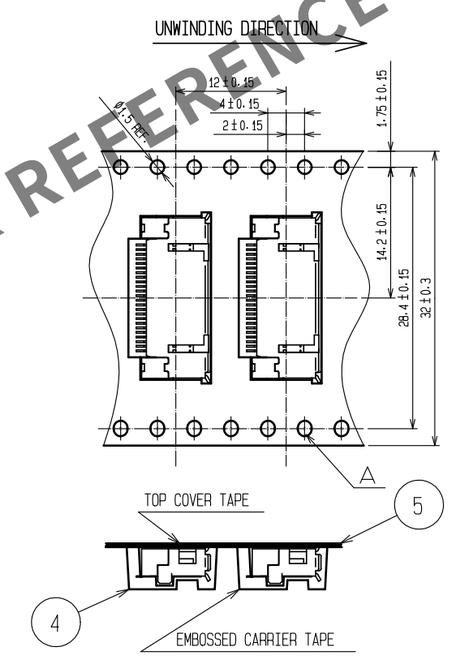

FIGURE FOR PACKAGING (FREE)

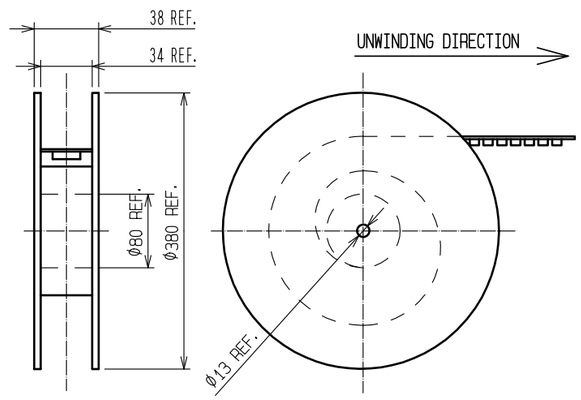

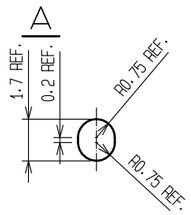

HRS DRAWING FOR REFERENCE

3 FIG.1. CODE CONFIGURATION FOR 4 DIGITS OF MANUFACTORING LOT NO.

< EXAMPLE > 1 H C 2 → 2011 YEAR, 8 MONTH, 12 DAY
① ② ③ ④

① Year		② Month		③ Day						④ Line No.	
Year	Symbol	Month	Symbol	Day	Symbol	Day	Symbol	Day	Symbol	Line No.	Symbol
2011	1	Jan.	A	1	1	11	B	21	M	1	A
2012	2	Feb.	B	2	2	12	C	22	N	2	B
2013	3	Mar.	C	3	3	13	D	23	P	3	C
2014	4	Apr.	D	4	4	14	E	24	Q	4	D
2015	5	May.	E	5	5	15	F	25	R	5	E
2016	6	Jun.	F	6	6	16	G	26	S	6	F
2017	7	Jul.	G	7	7	17	H	27	T	7	G
2018	8	Aug.	H	8	8	18	J	28	U	8	H
2019	9	Sep.	I	9	9	19	K	29	V	9	I
2020	0	Oct.	J	10	A	20	L	30	W	10	J
		Nov.	K					31	X		
		Dec.	L								

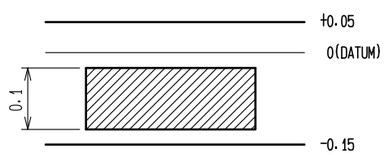

NOTE 1 1REEL : 1500 PIECES.
1REEL CONSISTS OF 1500 PIECES FOR SALE.
2 CO-PLANARITY SPECIFICATION AS FIG SHOWN IN THE RIGHT.
3 MANUFACTORING LOT NO. SHALL BE INDICATED AT THE POSITION AS SHOWN.

NO.	MATERIAL	FINISH , REMARKS	NO.	MATERIAL	FINISH , REMARKS
3	STAINLESS STEEL	TIN PLATING			
2	COPPER	SELECTIVE GOLD PLATED	5	PS	TOP COVER TAPE
1	LCP	BLACK	4	PS	EMBOSSED CARRIER TAPE

UNITS	SCALE	COUNT	DESCRIPTION OF REVISIONS	DESIGNED	CHECKED	DATE
mm	4 : 1	0				

HRS HIROSE ELECTRIC CO., LTD.

APPROVED	: MN. KENJO	20220426	DRAWING NO.	EDC-123316-30-02
CHECKED	: KG. OKITA	20220422	PART NO.	ST60-24P(30)
DESIGNED	: MO. SHIMOYAMA	20220422	CODE NO.	CL0241-0003-0-30
DRAWN	: MO. SHIMOYAMA	20220422		0 1/1

FORM HC0011-5-7