Sep.1.2025 Copyright 2025 HIROSE ELECTRIC CO., LTD. All Rights Reserved.
In case of consideration for using Automotive equipment / device which demand high reliability, kindly contact our sales window correspondents.

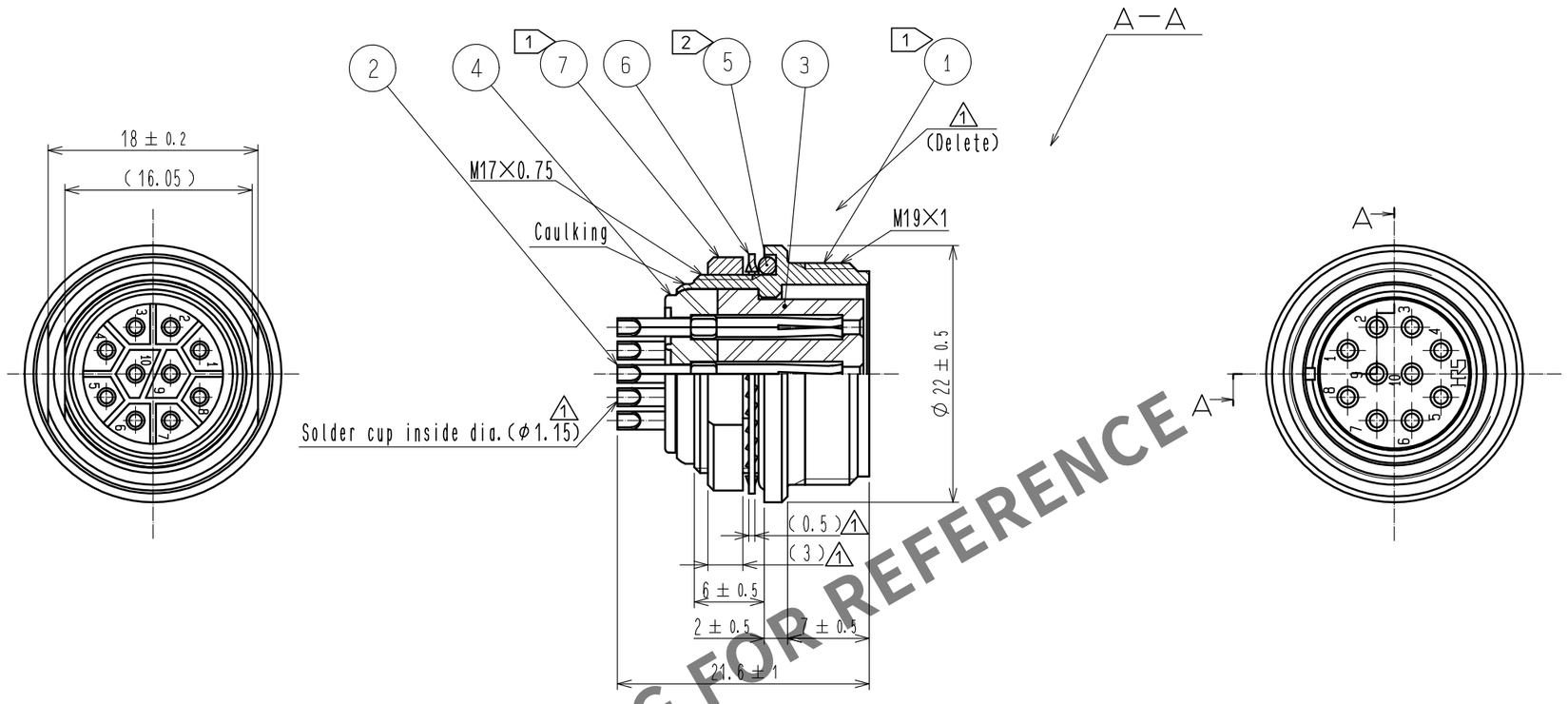

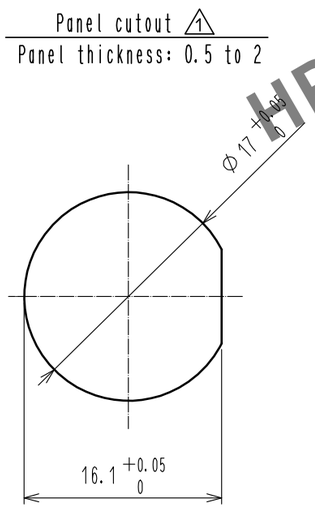

HRS DRAWING FOR REFERENCE

Notes 1 The tighteninig torque of Ref. No. ⑦: 3 to 4 N・m.
Apply Loctite 243 HENKEL JAPAN or equivalent to the threaded portion (M17×0.75) of Ref. No.①
in order to prevent loosening.
2 When mounted on chassis, be careful that Ref.No.⑤ is fitted into the indicated
groove without any biting.
3 Surface: Gold plating 0.2μm min.
Under: Nickel plating 3μm min.

NO.	MATERIAL	FINISH , REMARKS	NO.	MATERIAL	FINISH , REMARKS
4	Polyphenylene sulfide	(Black)			
3	Polyphenylene sulfide	(Black)	7	Brass	Nickel plating
2	Copper alloy	3	6	Phosphor bronze	Nickel plating
1	Zinc alloy	Chrome plating	5	Silicon rubber	(Black)

UNITS	SCALE		COUNT	DESCRIPTION OF REVISIONS	DESIGNED	CHECKED	DATE
mm	2 : 1	1	5	DIS-C-00015646	HT. ZENBA	HY. KOBAYASHI	20230626

HRS HIROSE ELECTRIC CO., LTD.

APPROVED	: TP. KOMATSU	20230131	DRAWING NO.	EDC-111081-82-00
CHECKED	: HY. KOBAYASHI	20230131	PART NO.	RM15WTRZ-10S(82)
DESIGNED	: HT. ZENBA	20230131	CODE NO.	CL0109-1641-6-82
DRAWN	: KR. SUZUKI	20230131		1/1

FORM HC0011-5-7