Dec.1.2025 Copyright 2025 HIROSE ELECTRIC CO., LTD. All Rights Reserved.
In case of consideration for using Automotive equipment / device which demand high reliability, kindly contact our sales window correspondents.

Notes 1 Rotation example of Ref. No.① and ⑧ are shown.
2 The tighteninig torque of Ref. No.⑧ : 2 to 3 N・m.

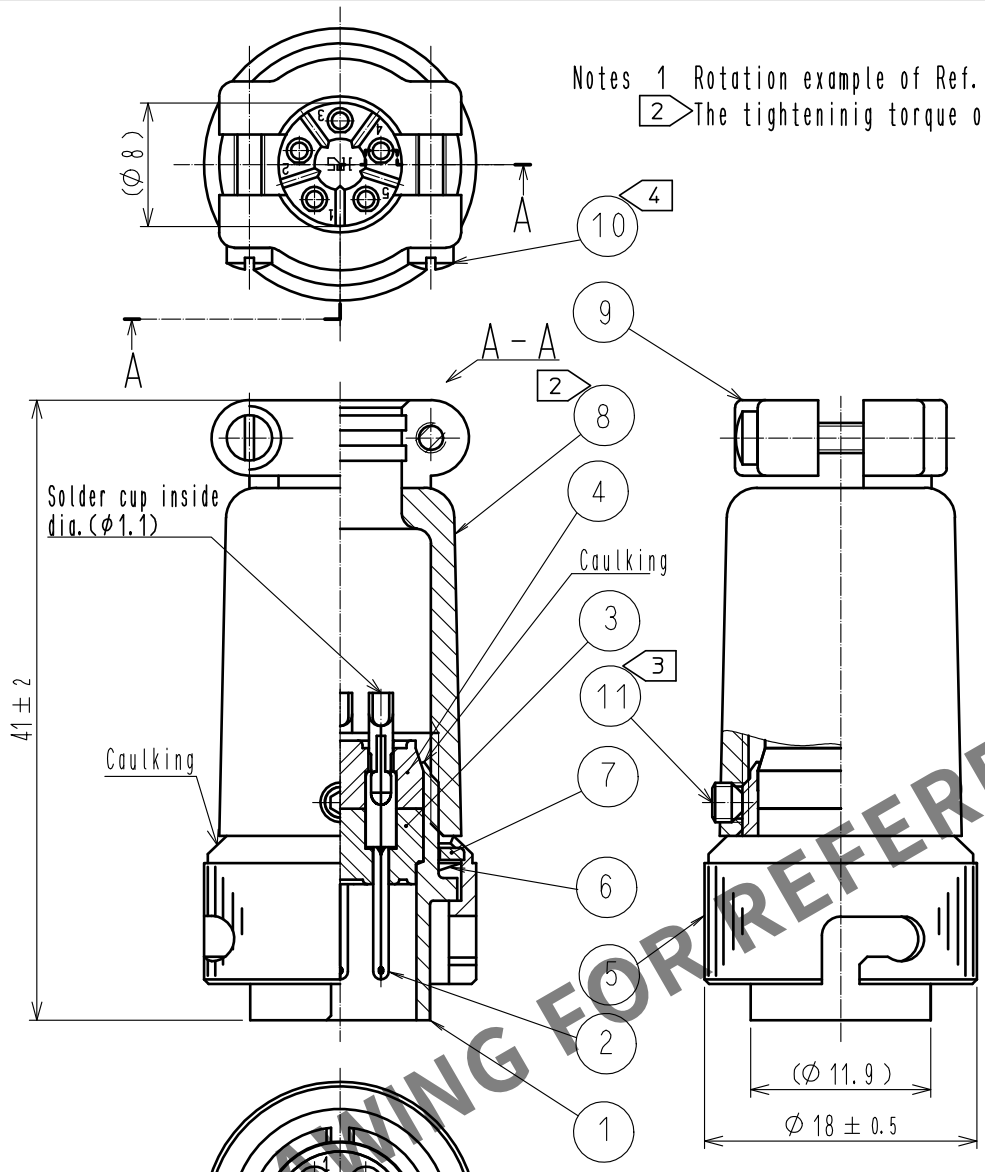

HRS DRAWING FOR REFERENCE

Notes 3 The tighteninig torque of Ref. No.⑪ : 0.2 to 0.3 N・m.
Across flats hexagon head of Ref. No.⑪ : 1.27
Apply Loctite 243 HENKEL JAPAN or equivalent to the threaded portion of Ref. No.⑪ in order to prevent loosening.
4 The tighteninig torque of Ref. No.⑩ : 0.12 to 0.15 N・m.
Apply Loctite 243 HENKEL JAPAN or equivalent to the threaded portion of Ref. No.⑩ in order to prevent loosening.
5 The cable pull and twisting strength and other characteristics may differ, depending on the cable structure, please confirm before the use.

NO.	MATERIAL	FINISH . REMARKS	NO.	MATERIAL	FINISH . REMARKS
6	Beryllium copper	Nickel plating			
5	Brass	Matte finish nickel plated	11	Steel	Nickel plating Hexagon socket set screws M2.6×0.45×2
4	Polyphenylene sulfide	(Black)	10	Brass	Nickel plating Slotted head screw M2×0.4×8
3	Polyphenylene sulfide	(Black)	9	Zinc alloy	Matte finish nickel plated
2	Copper alloy	Silver plating 2μm min.	8	Zinc alloy	Matte finish nickel plated
1	Zinc alloy	Matte finish nickel plated	7	Brass	Nickel plating

UNITS	SCALE	COUNT	DESCRIPTION OF REVISIONS	DESIGNED	CHECKED	DATE
mm	2 : 1	0				

HIROSE ELECTRIC CO., LTD.

APPROVED	: TP. KOMATSU	20230612	DRAWING NO.	EDC-112322-81-00
CHECKED	: HY. KOBAYASHI	20230612	PART NO.	RM12BPE-5PH(81)
DESIGNED	: HT. ZENBA	20230609	CODE NO.	CL0109-0420-1-81
DRAWN	: KR. SUZUKI	20230607		0 1/1

FORM HC0011-5-51