Sep.1.2025 Copyright 2025 HIROSE ELECTRIC CO., LTD. All Rights Reserved.
In case of consideration for using Automotive equipment / device which demand high reliability, kindly contact our sales window correspondents.

	COUNT	DESCRIPTION OF REVISIONS	BY	CHKD	DATE		COUNT	DESCRIPTION OF REVISIONS	BY	CHKD	DATE
△					. .	△					. .
△					. .	△					. .
△					. .	△					. .

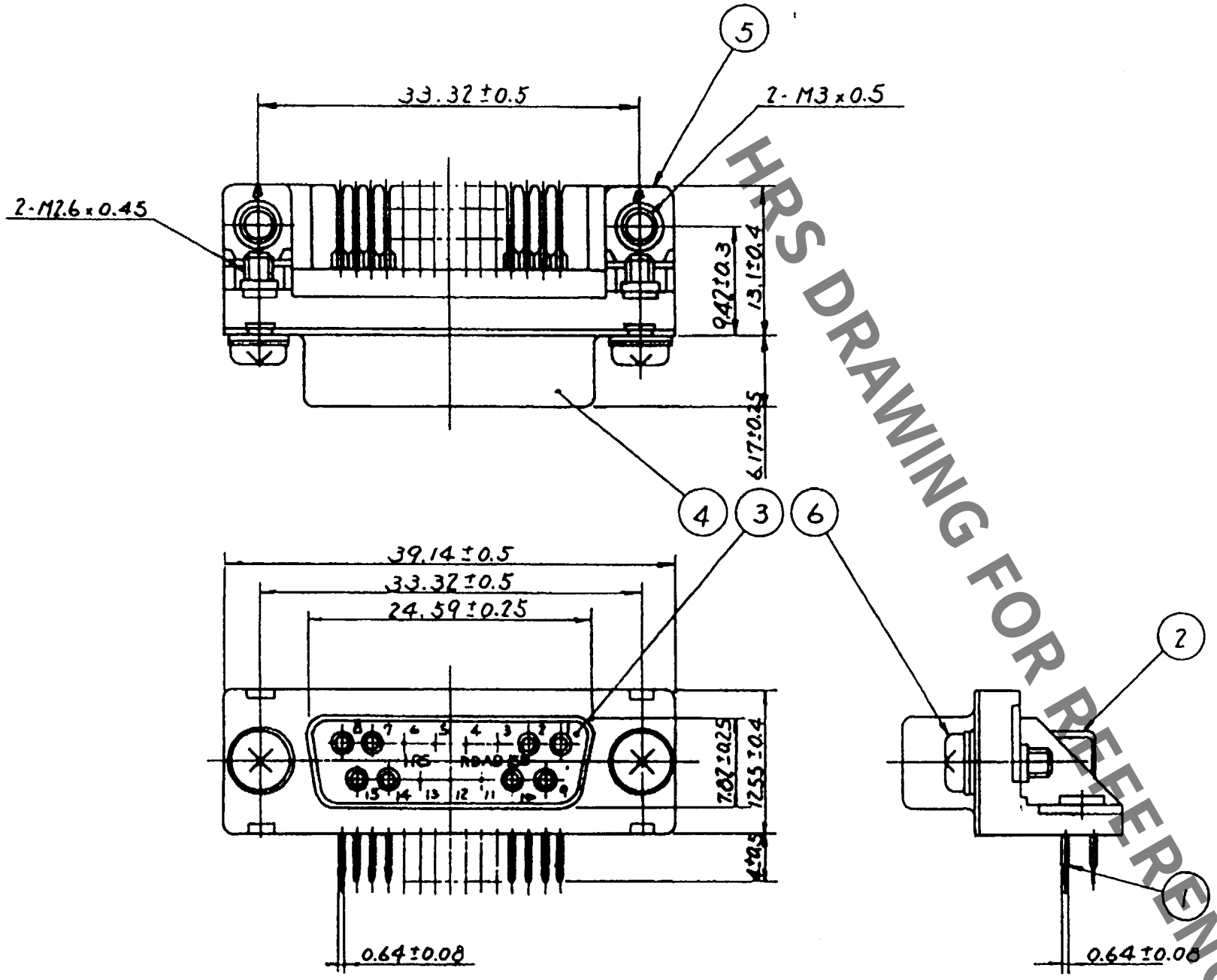

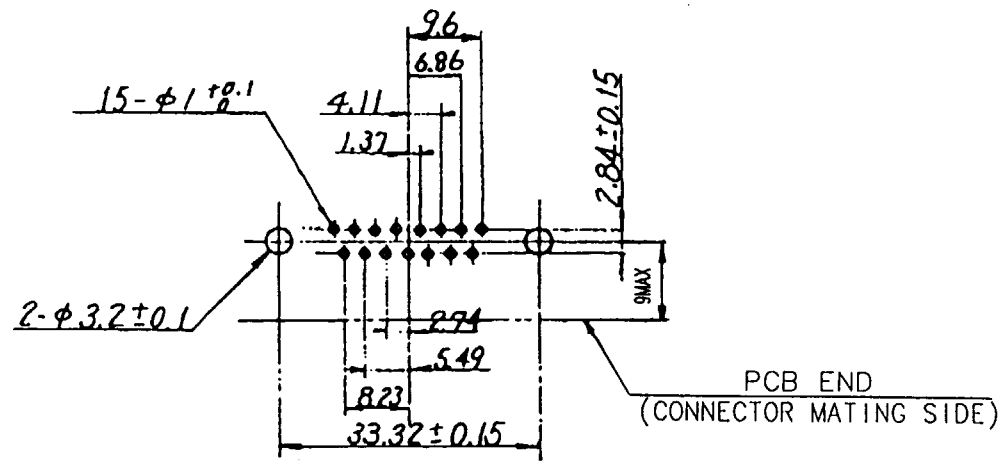

NOTE. PLEASE KEEP THE TOLERANCE TO LESS THAN ±0.1
FOR THE DIMENSIONS WITHOUT TOLERANCE.

RECOMMENDED PC BOARD HOLE PATTERN
(SCALE 1:1)

NO.	MATERIAL	FINISH, REMARKS	NO.	MATERIAL	FINISH, REMARKS
3	PBT	UL94V-0(BLACK)	6	STEEL	NICKEL PLATING
2	PHOSPHOR BRONZE	SELECTIVE GOLD PLATING 0.2μm	5	STEEL	NICKEL PLATING
1	PHOSPHOR BRONZE	SELECTIVE GOLD PLATING 0.2μm	4	STEEL	NICKEL PLATING

CODE NO.(OLD)	DRAWN	DESIGNED	CHECKED	APPROVED	RELEASED
CL	T. Hamaya 03.7.18	T. Hamaya 03.7.18	Y. Enami 03.07.18	H. Miura 03.07.18	. .

SCALE 2 : 1	DRAWING NO. EDC3-020687-02	PART NO. RDAD-15S(55)
UNITS mm	HRS HIROSE ELECTRIC CO., LTD	CODE NO. CL211-0315-1-55 1/1

FORM NO.229

TO
Q

Q1