Oct.1.2025 Copyright 2025 HIROSE ELECTRIC CO., LTD. All Rights Reserved.
In case of consideration for using Automotive equipment / device which demand high reliability, kindly contact our sales window correspondents.

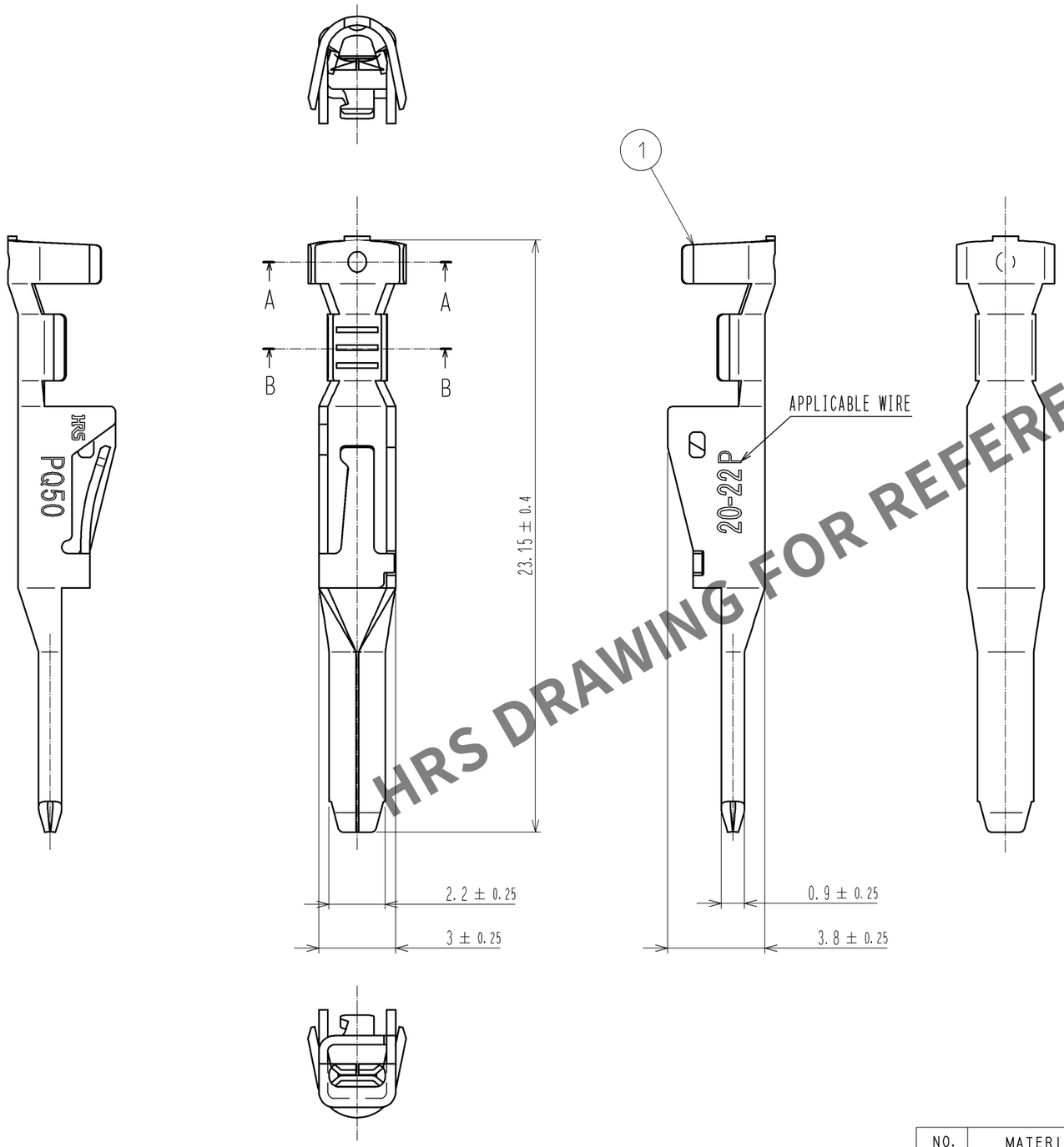

HRS DRAWING FOR REFERENCE

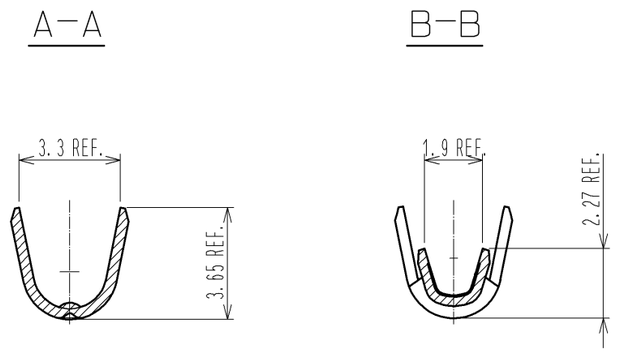

NOTES
1. APPLICABLE WIRE IS AWG #20～#22.(UL1007.UL1015)
   INSULATION DIAMETER φ2.70mm MAX.
2. APPLICABLE CRIMPING MACHINE AND CRIMPING CONDITIONS
   (CRIMP HEIGHT etc.)WILL BE SPECIFIED ACCORDING TO
   AWG # OR WIRE APPLIED.
3. ONE PACKAGE CONSISTS OF 100 PCS.
4. △2 REFER TO ATAI-E2926 FOR CRIMP QUALITY STANDARDS.

NO.	MATERIAL	FINISH , REMARKS	NO.	MATERIAL	FINISH , REMARKS
			1	COPPER ALLOY	CONTACT AREA : GOLD PLATING 0.2μm MIN. TERMINAL AREA : TIN PLATING 1μm MIN. UNDER PLATING : NICKEL PLATING 0.5μm MIN.

UNITS	SCALE		COUNT	DESCRIPTION OF REVISIONS	DESIGNED	CHECKED	DATE
mm	5 : 1	△2	1	DIS-E-004910	TY. MIURA	NM. NISHIMATSU	14.01.20

HRS HIROSE ELECTRIC CO., LTD.

APPROVED	: RI. TAKAYASU	12.12.11	DRAWING NO.	EDC3-128184-00
CHECKED	: AH. KODAMA	12.12.11	PART NO.	PQ50-2022PCA
DESIGNED	: TY. MIURA	12.12.10		
DRAWN	: TY. MIURA	12.12.10	CODE NO.	CL236-2039-3-00 △2 1/1

FORM HC0011-5-7