Oct.1.2025 Copyright 2025 HIROSE ELECTRIC CO., LTD. All Rights Reserved.
In case of consideration for using Automotive equipment / device which demand high reliability, kindly contact our sales window correspondents.

	COUNT	DESCRIPTION OF REVISIONS	BY	CHKD	DATE		COUNT	DESCRIPTION OF REVISIONS	BY	CHKD	DATE
1	1	RE-J-02130	N.S	R.K	'04. 2. 9						. .
2	5	RE-J-02188	N.S	R.K	'04.6.21						. .
					. .						. .

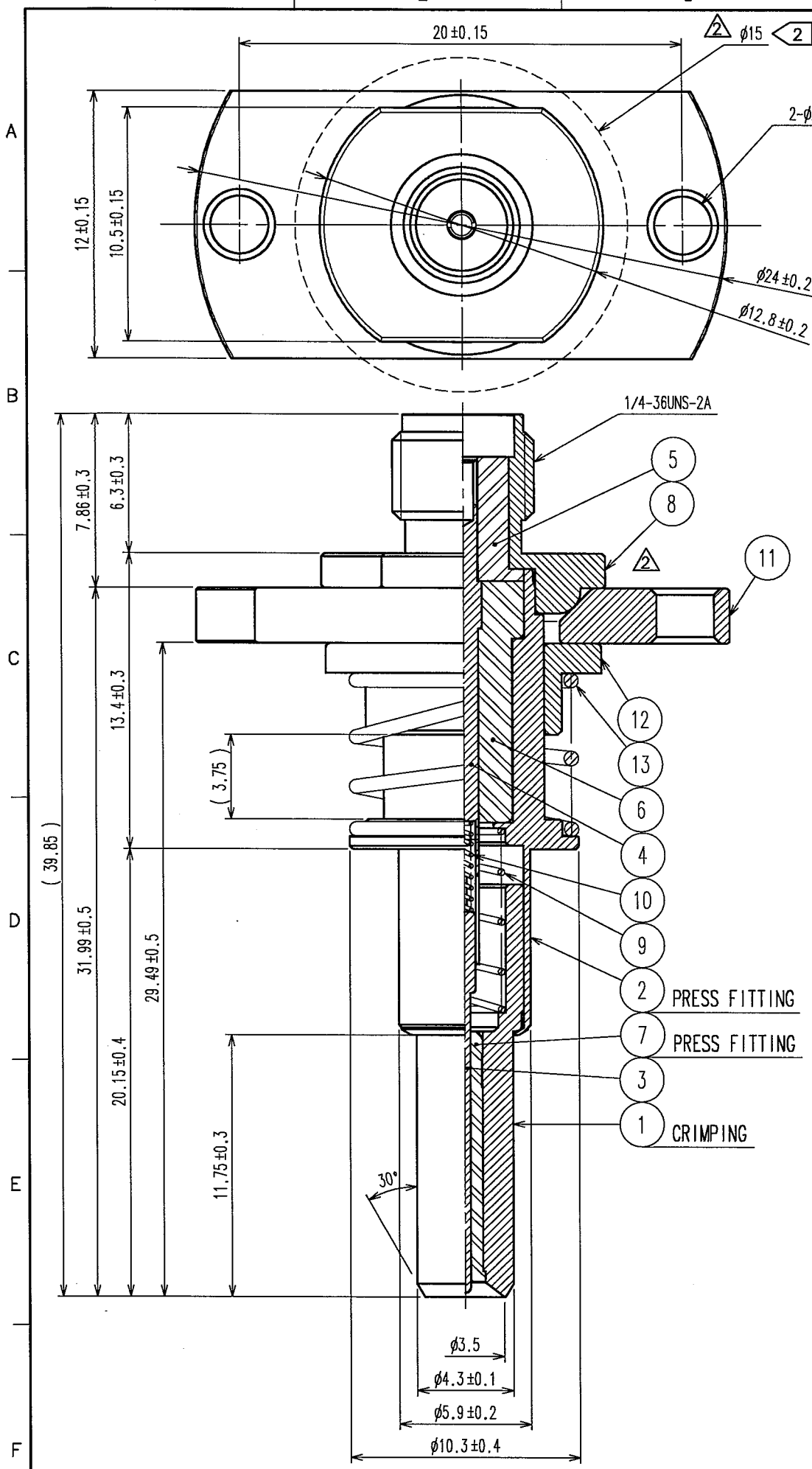

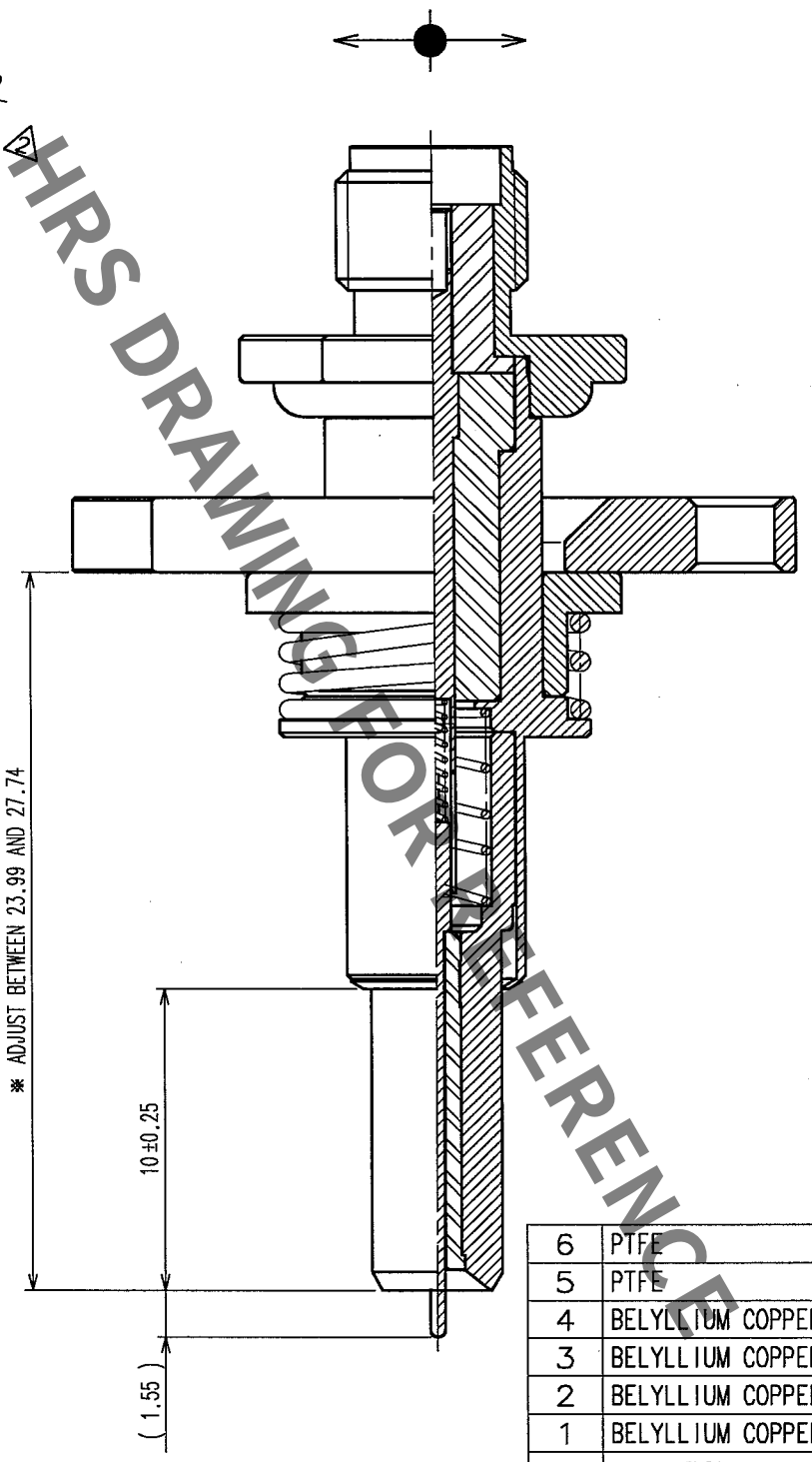

1 FIGURE 1 (2:1)

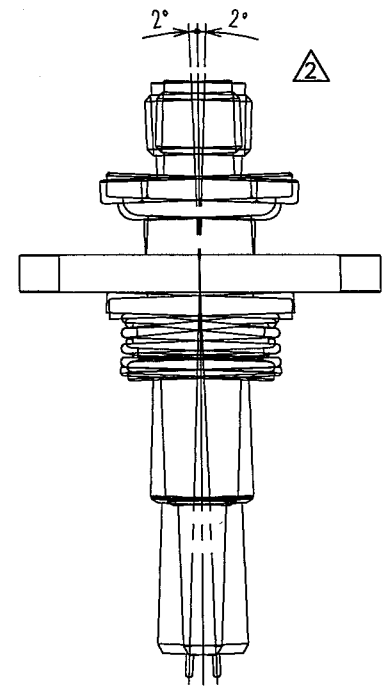

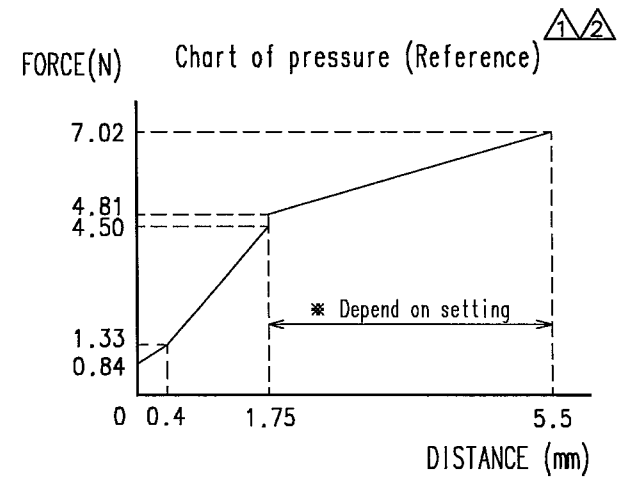

NO.	MATERIAL	FINISH, REMARKS	NO.	MATERIAL	FINISH, REMARKS
6	PTFE		13	STAINLESS STEEL	
5	PTFE		12	PHOSPHOR BRONZE	NICKEL PLATING
4	BELYLLIUM COPPER	GOLD PLATING	11	STAINLESS STEEL	PASSIVATE
3	BELYLLIUM COPPER	GOLD PLATING	10	STAINLESS STEEL	GOLD PLATING
2	BELYLLIUM COPPER	GOLD PLATING	9	STAINLESS STEEL	GOLD PLATING
1	BELYLLIUM COPPER	GOLD PLATING	8	STAINLESS STEEL	PASSIVATE
			7	PTFE	

CODE NO.(OLD)	DRAWN	DESIGNED	CHECKED	APPROVED	RELEASED
	N.SHIRAI '03.11.4	N.SHIRAI '03.11.4	R.KANO '03.11.11	K.KAWAMURA '03.11.19	. .

SCALE 4 : 1
UNITS mm

DRAWING NO. EDC3-180384

HRS HIROSE ELECTRIC CO., LTD

PART NO. MS-156-HRMJ-12

CODE NO. CL358-0196-6

1/1

FORM NO.229

TO
RFD

NOTE 1 Mating angle which is less than 2 degree is acceptable.(Refer to fig.1)
2 No obstacles in this area.

HRS DRAWING FOR REFERENCE