Oct.1.2025 Copyright 2025 HIROSE ELECTRIC CO., LTD. All Rights Reserved.
In case of consideration for using Automotive equipment / device which demand high reliability, kindly contact our sales window correspondents.

5 Fig.2(1:1)

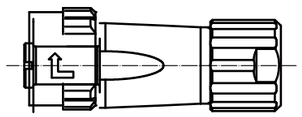

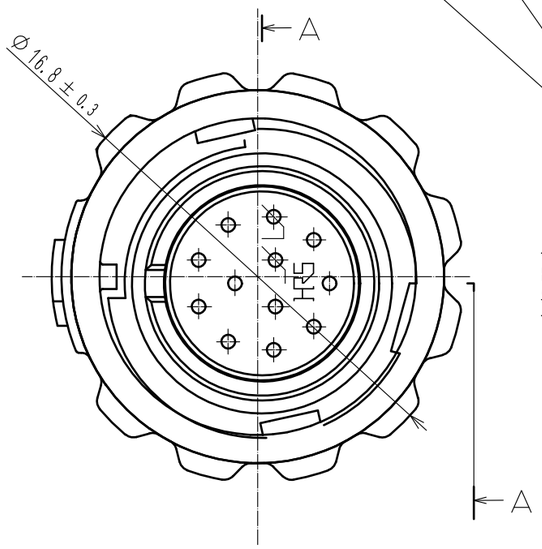

A–A

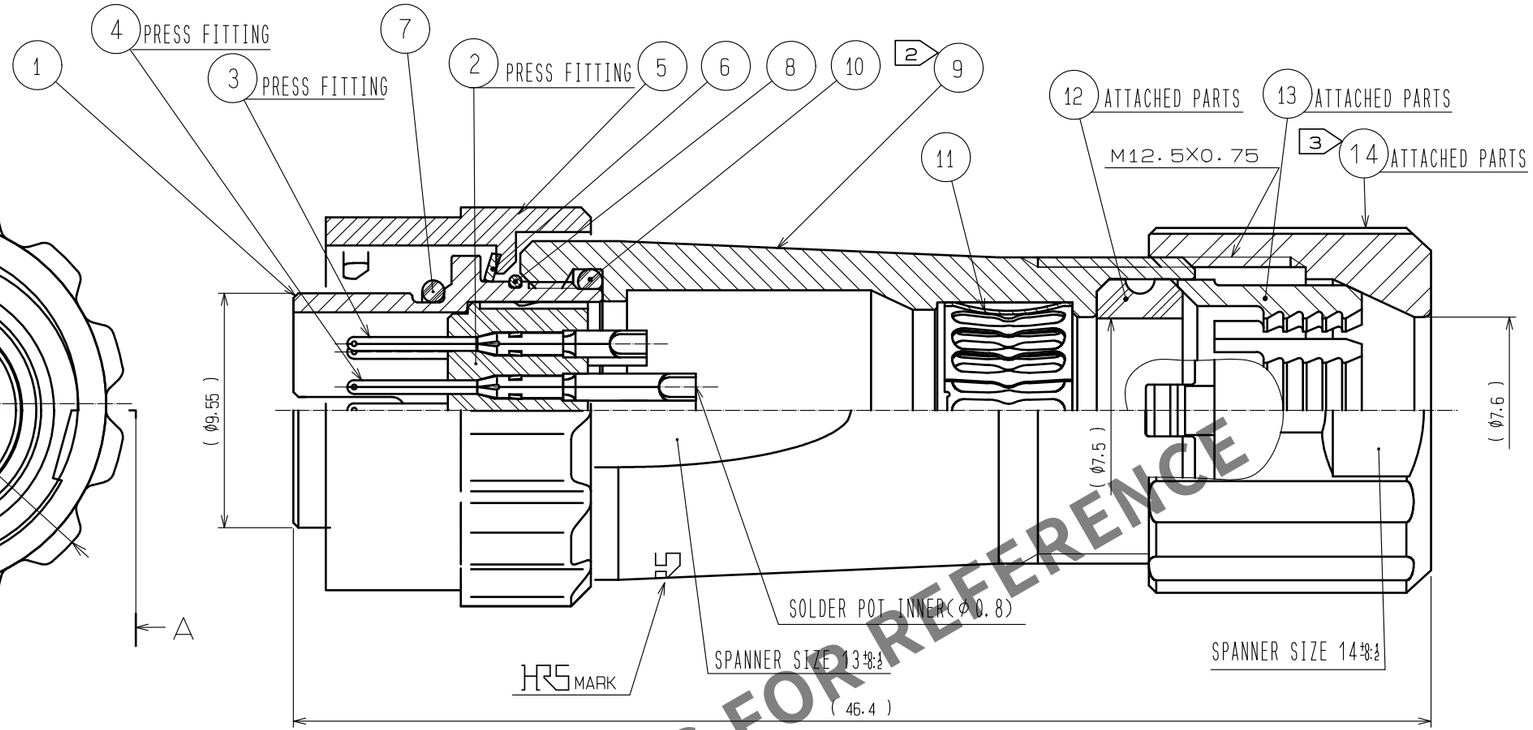

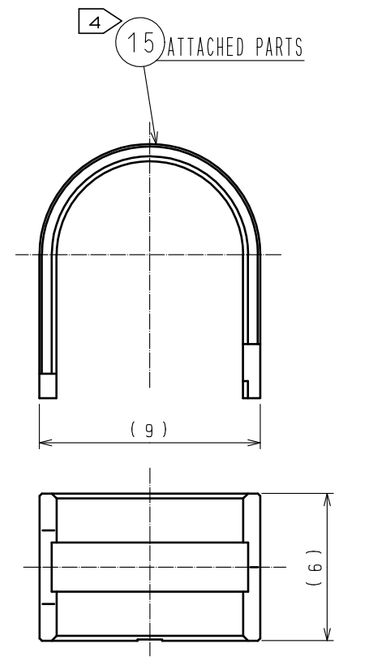

Fig.1(2:1)

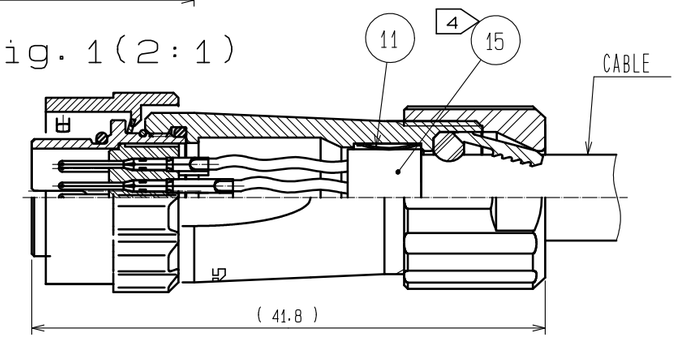

HRS DRAWING FOR REFERENCE

NOTES
1 PLATING(REF.NO.③,④)
CONTACT AREA : GOLD 0.2μm min.
OTHERS : GOLD OR NICKEL
UNDER PLATING : NICKEL 2μm min.

△1 2 THE RECOMMENDED CLAMP TORQUE OF REF.NO.⑨ TO BE 1 TO 1.5N·m.
THREAD LOCKER TO THE THREADED PORTION OF REF.NO.① APPLIES TO PREVENT REF.NO.⑨ FROM LOOSING.
RECOMMENDED THREAD LOCKER:LOCTITE 263, HENKEL JAPAN LTD.

△1 3 THE RECOMMENDED CLAMP TORQUE OF REF.NO.⑭ TO BE 0.8 TO 1N·m.
THREAD LOCKER AND LOCK PRIMER TO THE THREADED PORTION M12.5X0.75 OF REF.NO.⑨ APPLIES TO PREVENT REF.NO.⑭ FROM LOOSING.
RECOMMENDED THREAD LOCKER AND LOCK PRIMER : LOCTITE 263, LOCK PRIMER 7649, HENKEL JAPAN LTD.

4 FASTEN REF.NO.⑮ TO THE CABLE WITH THE CABLE CRIMPING TOOL.
AND MAKE REF.NO.⑮ CONTACT WITH REF.NO.⑪ (REFER TO Fig.1).
REFER TO THE TECHNICAL SPECIFICATION ETAD-C0099 FOR DETAILS.
APPLICABLE CABLE CRIMPING TOOL : LF-TC-01 (CL150-0234-6)

5 Fig.2 SHOWS THE APPEARANCE AFTER ASSEMBLY.

6 APPLICABLE CABLE ASSEMBLY FIXTURE : LF10BP-T01 (CL150-0235-9)
CABLE ASSEMBLY FIXTURE IS USED AS A RECEPTACLE STAND OF EXTRACT AND THE PART NUMBER ① OF AN ASSEMBLY.

7 ROTATION EXAMPLES OF REF.⑤, ⑨ AND ⑭ TO ① ARE SHOWN.

8 THE CABLE PULL, TWISTING STRENGTH, WATERPROOF ABILITY AND OTHER CHARACTERISTICS MAY DIFFER, DEPENDING ON THE CABLE STRUCTURE, PLEASE CONFIRM BEFORE THE USE.

NO.	MATERIAL	FINISH , REMARKS	NO.	MATERIAL	FINISH , REMARKS
8	STAINLESS STEEL				
7	CHLOROPRENE RUBBER	(BLACK)	15	BRASS	NICKEL PLATING
6	STAINLESS STEEL		14	PPS	(NATURAL, BROWN) UL94V-0
5	ZINC ALLOY	NICKEL PLATING	13	POLYAMIDE	(NATURAL, MILKY WHITE) UL94V-0
4	COPPER ALLOY	1	12	CHLOROPRENE RUBBER	(BLACK)
3	COPPER ALLOY	1	11	PHOSPHOR BRONZE	NICKEL PLATING
2	PPS	(BLACK) UL94V-0	10	CHLOROPRENE RUBBER	(BLACK)
1	ZINC ALLOY	NICKEL PLATING	9	ZINC ALLOY	NICKEL PLATING

UNITS	SCALE		COUNT	DESCRIPTION OF REVISIONS	DESIGNED	CHECKED	DATE
mm	4 : 1	△1	2	DIS-C-00017016	HT. ZENBA	EJ. KUNII	20240311

HRS HIROSE ELECTRIC CO., LTD.

APPROVED	: HY. KOBAYASHI	20180222	DRAWING NO.	EDC-117089-31-00
CHECKED	: HY. KOBAYASHI	20180222	PART NO.	LF10WBPD-12P(31)
DESIGNED	: TY. SUZUKI	20180221	CODE NO.	CL0136-0018-4-31 △1 1/1
DRAWN	: HM. SAITO	20180219		

FORM HC0011-5-7