Oct.1.2025 Copyright 2025 HIROSE ELECTRIC CO., LTD. All Rights Reserved.
In case of consideration for using Automotive equipment / device which demand high reliability, kindly contact our sales window correspondents.

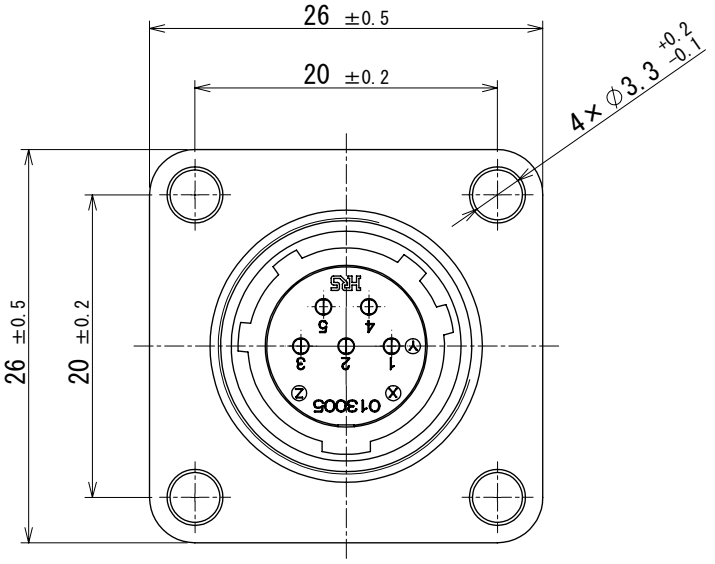

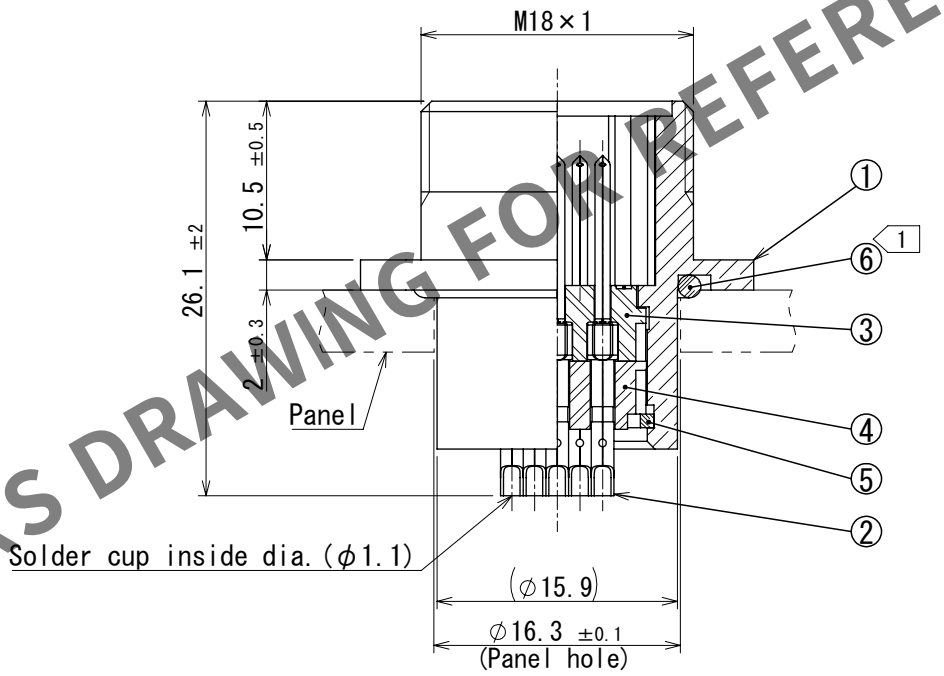

HRS DRAWING FOR REFERENCE

Note 1 When mounted on chassis, be careful that reference Ref.No.⑥ is fitted into the indicated groove without any biting.

NO.	MATERIAL	FINISH , REMARKS	NO.	MATERIAL	FINISH , REMARKS
3	Polyphenylene sulfide	(Black) UL94V-0	6	Silicon rubber	(Black)
2	Copper alloy	Silver plating 3μm min.	5	Phosphor bronze	Nickel plating
1	Aluminum alloy	Black chrome plating	4	Polyphenylene sulfide	(Black) UL94V-0

UNITS	SCALE	COUNT	DESCRIPTION OF REVISIONS	DESIGNED	CHECKED	DATE
mm	2:1	0				

HIROSE ELECTRIC CO., LTD.

APPROVED	: EJ. KUNII	2023. 12. 07
CHECKED	: EJ. KUNII	2023. 12. 07
DESIGNED	: SY. KONDO	2023. 12. 07
DRAWN	: KR. SUZUKI	2023. 12. 07

DRAWING NO.	EDC-404962-00-00
PART NO.	JR13WRH-5P
CODE NO.	CL0114-0066-0-00

0 1/1

FORM HC0011-5