Aug.1.2025 Copyright 2025 HIROSE ELECTRIC CO., LTD. All Rights Reserved.
In case of consideration for using Automotive equipment / device which demand high reliability, kindly contact our sales window correspondents.

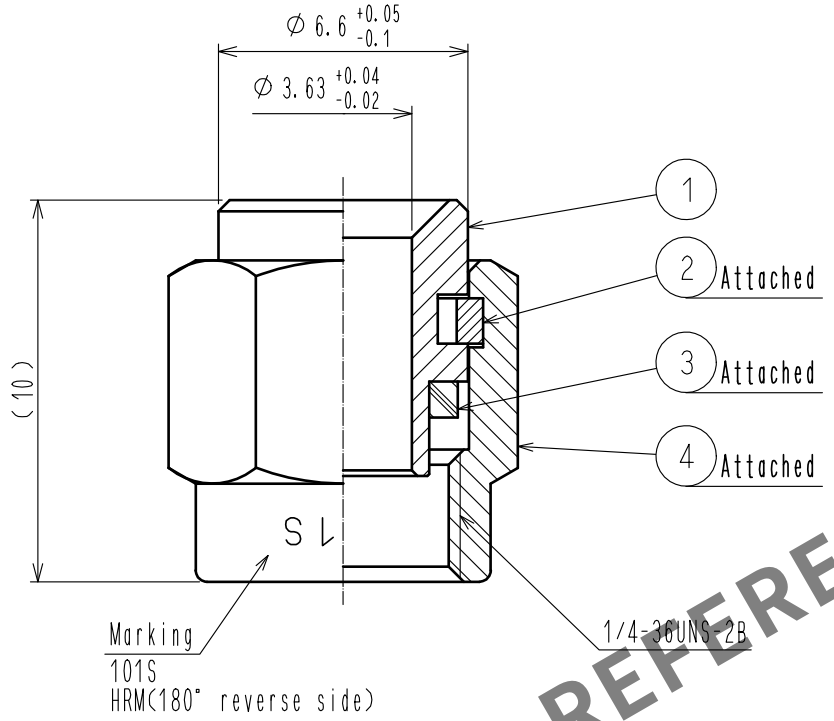

HRS DRAWING FOR REFERENCE

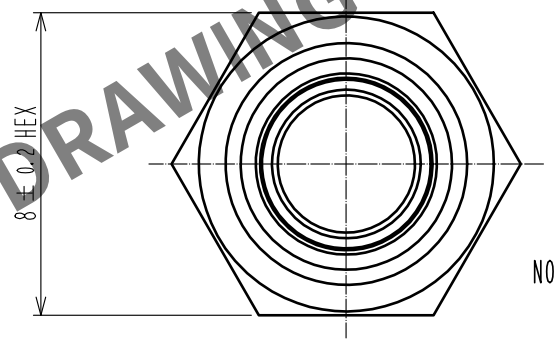

NOTE 1. THE CONNECTOR USES THE CENTER CONDUCTOR OF THE APPLICABLE CABLE AS THE CENTER TERMINAL.
[APPLICABLE CABLE]
RG-402(0.141 INCH SEMI-RIGID CABLE)

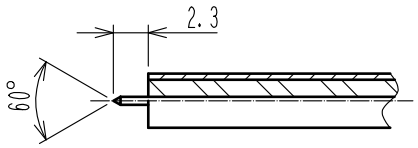

NO.	MATERIAL	FINISH . REMARKS	NO.	MATERIAL	FINISH . REMARKS
2	BERYLLIUM COPPER	NICKEL PLATING	4	STAINLESS STEEL	PASSIVATE
1	STAINLESS STEEL	GOLD PLATING	3	SILICONE RUBBER	(RED)

UNITS mm	SCALE 5 : 1	COUNT	DESCRIPTION OF REVISIONS	DESIGNED	CHECKED	DATE
		0				

HIROSE ELECTRIC CO., LTD.

APPROVED	NK. NINOMIYA	20220202	DRAWING NO.	EDC-007291-09-00
CHECKED	NK. NINOMIYA	20220202	PART NO.	HRM-101S(09)
DESIGNED	MT. KANEKO	20220201	CODE NO.	CL0323-0153-0-09
DRAWN	YK. MITSUISHI	20220201		0 1/1

FORM HC0011-5-51