Oct.1.2025 Copyright 2025 HIROSE ELECTRIC CO., LTD. All Rights Reserved.
In case of consideration for using Automotive equipment / device which demand high reliability, kindly contact our sales window correspondents.

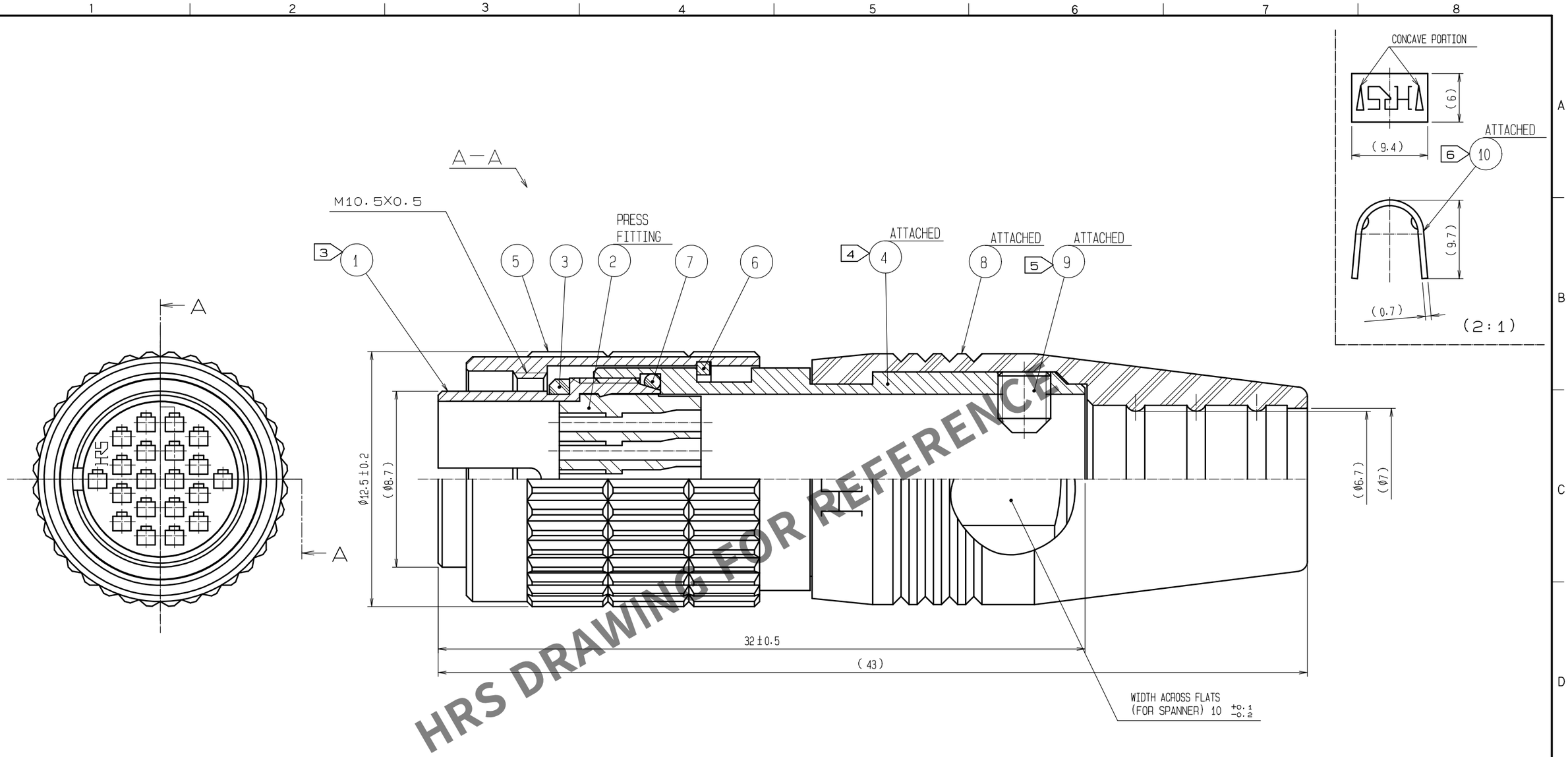

NOTES
1 APPLICABLE CRIMP CONTACT:HR25-PC-211(CL125-0420-0)(APPLICABLE WIRE:AWG#30,WIRE JACKET DIAMETER:φ0.71 MAX.)
2 APPLICABLE CONTACT REMOVAL TOOL(EXTRACTION TOOL):HR25-TP(CL150-0091-0)
3 THREAD PORTION OF REF. No.(1) IS APPLIED WITH PRECOATING TO PREVENT LOOSENESS.
HOWEVER, THE ADHESIVE EFFECTIVENESS IS DECREASED WHEN REUSED.
△1 THEREFORE, THREAD PORTION APPLIES TO COAT WITH LOCTITE 263 MANUFACTURED BY HENKEL JAPAN OR EQUIVALENT.
4 THE RECOMMENDED TIGHTENING TORQUE OF REF. No.(4) TO BE 1 N·m.
5 THE TIP OF REF. No.(9) SHALL BE FIXED TO THE CONCAVE PORTION WITH REF. No.(10) CLAMPED TO THE CABLE.
OPPOSITE SIDE DIMENSION OF A HEXAGON SOCKET OF REF. No.(9) IS 1.27mm.
AND THE RECOMMENDED TIGHTENING TORQUE OF REF. No.(9) TO BE 0.3 TO 0.4 N·m.
6 MANUAL CRIMPING TOOL OF REF. No.(10) : HR10A-TC-02(CL150-0041-2)(THE HOLE DIAMETER FOR CRIMPING:φ7)
7 ROTATION EXAMPLES OF REF. No.(1) AND (4) ARE SHOWN.
8 THE CABLE PULL AND TWISTING STRENGTH AND OTHER CHARACTERISTICS MAY DIFFER,DEPENDING ON THE CABLE STRUCTURE.
PLEASE CONFIRM BEFORE THE USE.
△1 9 THE ASSEMBLY THIS PRODUCT APPLIES TO THE MANUAL ETAD-C0474-00.

NO.	MATERIAL	FINISH , REMARKS	NO.	MATERIAL	FINISH , REMARKS
5	BRASS	NICKEL PLATING	10	BRASS	
4	BRASS	NICKEL PLATING	9	STEEL	NICKEL PLATING M2.6X0.45X3
3	ETHYLENE PROPYLENE RUBBER	(BLACK)	8	ETHYLENE PROPYLENE RUBBER	(BLACK)
2	POLYPHENYLENE SULFIDE	(BLACK) UL94V-0	7	ETHYLENE PROPYLENE RUBBER	(BLACK)
1	ZINC ALLOY	MATTE FINISH NICKEL PLATED	6	PHOSPHOR BRONZE	NICKLE PLATING

UNITS	SCALE	COUNT	DESCRIPTION OF REVISIONS	DESIGNED	CHECKED	DATE
mm	5 : 1	△1 2	DIS-C-00016973	HT.ZENBA	HY.KOBAYASHI	20240508

HRS HIROSE ELECTRIC CO., LTD.

APPROVED	EJ.KUNII	20070621	DRAWING NO.	EDC3-048990-72
CHECKED	YH.YAMADA	20070619	PART NO.	HR25-9TP-20PC(72)
DESIGNED	HS.KAWASHIMA	20070618	CODE NO.	CL0125-0405-7-72 △1 1/1
DRAWN	MK.SATO	20070606		

FORM HC0011-5-7