Oct.1.2025 Copyright 2025 HIROSE ELECTRIC CO., LTD. All Rights Reserved.
In case of consideration for using Automotive equipment / device which demand high reliability, kindly contact our sales window correspondents.

	COUNT	DESCRIPTION OF REVISIONS	BY	CHKD	DATE		COUNT	DESCRIPTION OF REVISIONS	BY	CHKD	DATE
1	1	DIS-C-000585	T.K	E.K	07.07.27						. .
					. .						. .
					. .						. .

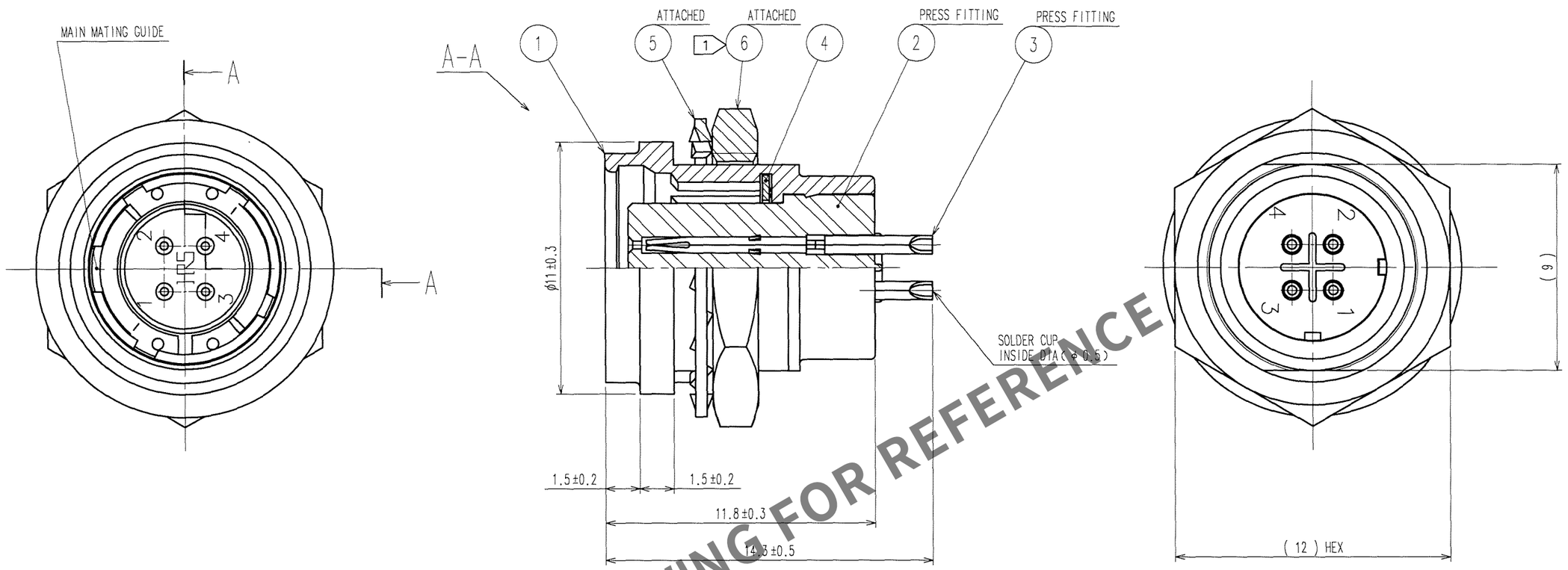

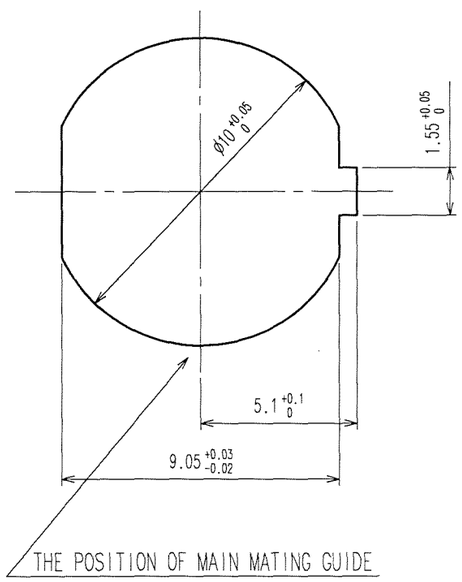

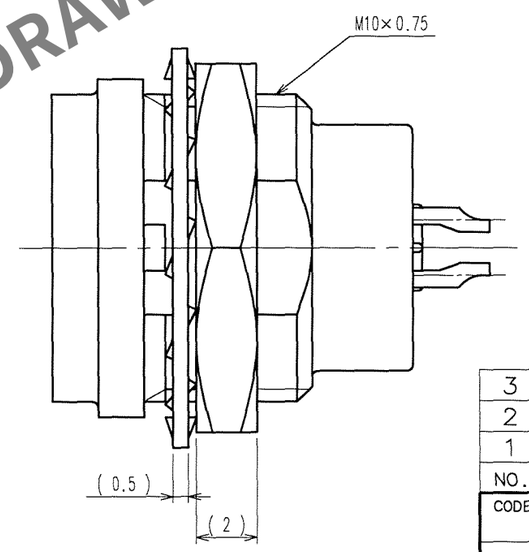

NOTES 1 THE RECOMMENDED TIGHTENING TORQUE OF REF. No.⑥ TO BE 1 N·m.
COATING WITH LOCTITE 242 MANUFACTURED BY HENKEL JAPAN OR EQUIVALENT IS RECOMMENDED TO PREVENT LOOSENESS.
2 CONTACT AREA : GOLD 0.2μm min.
TERMINAL AREA : GOLD FLASH.
UNDER PLATING : NICKEL 2μm min.

NO.	MATERIAL	FINISH, REMARKS	NO.	MATERIAL	FINISH, REMARKS
3	PHOSPHOR BRONZE	2	6	BRASS 1	NICKEL PLATING
2	POLYPHENYLENE SULFIDE	(BLACK) 94V-0	5	PHOSPHOR BRONZE	NICKEL PLATING
1	ZINC ALLOY	MATTE FINISH NICKEL PLATING	4	BERYLLIUM COPPER	NICKEL PLATING

CODE NO.(OLD)	DRAWN	DESIGNED	CHECKED	APPROVED	RELEASED
CL	M.SATO '06 09 27	Y.YAMADA '06 09 28	. .	M.SATO '06 09 29	. .

SCALE 5 : 1
UNITS mm
DRAWING NO. EDC3-115064
PART NO. HR25A-7R-4S
HRS HIROSE ELECTRIC CO., LTD
CODE NO. CL125-0622-5-00
1/1

TO
R

HRS DRAWING FOR REFERENCE