	COUNT	DESCRIPTION OF REVISIONS	BY	CHKD	DATE		COUNT	DESCRIPTION OF REVISIONS	BY	CHKD	DATE
△					. .	△					. .
△						△					. .
△						△					. .

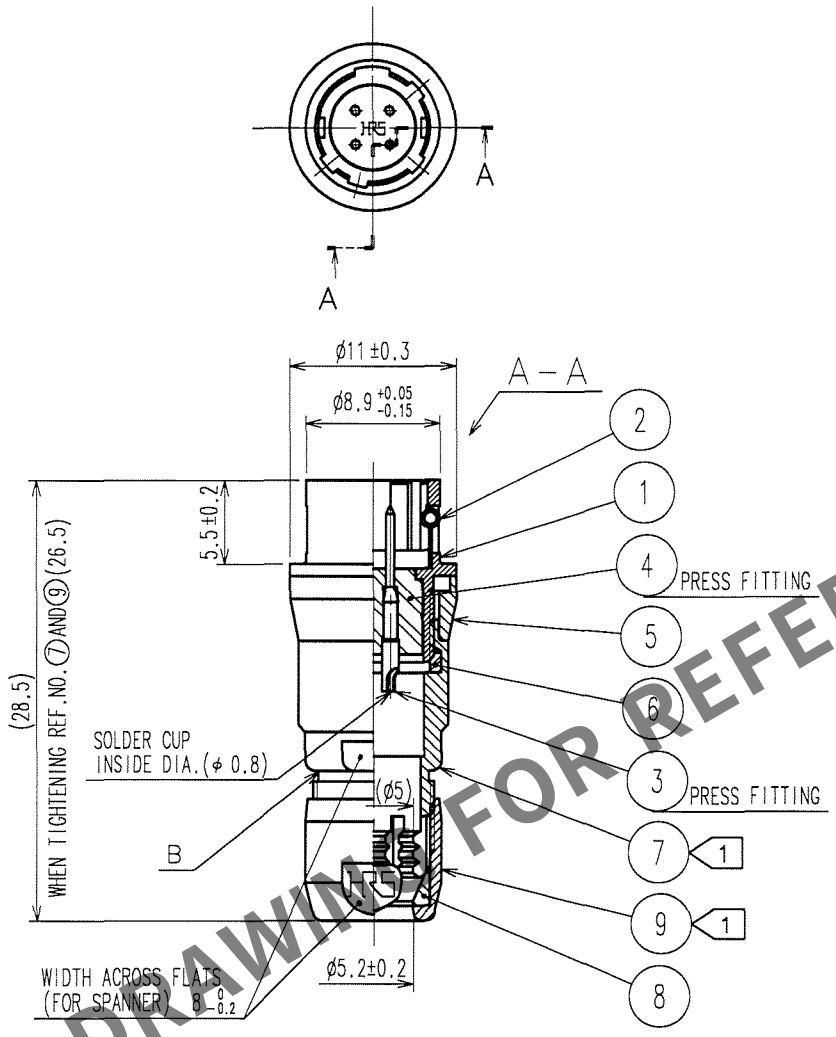

HRS DRAWING FOR REFERENCE

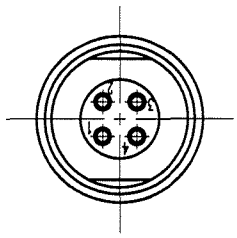

NOTES 1 THE RECOMMENDED CLAMP TORQUE, REF.NO. ⑦ AND ⑨ : 1.5 N · m.
REF.NO. ⑨ SHALL BE TIGHTENED BY TORQUE AFTER CLAMPED UNTIL IT TOUCHES THE SURFACE B.
2 ONE EXAMPLE OF THE ROTATION OF REF.NO. ①, ⑦ AND ⑨ ARE SHOWN.

NO.	MATERIAL	FINISH, REMARKS	NO.	MATERIAL	FINISH, REMARKS
4	POLYAMIDE	(BLUE)	9	BRASS	MATTE FINISH NICKEL PLATED
3	BRASS	GOLD PLATING 0.2μm min. NICKEL UNDER PLATING 2μm min.	8	POLYAMIDE	
			7	BRASS	MATTE FINISH NICKEL PLATED
2	STAINLESS STEEL		6	POLYAMIDE	
1	ZINC ALLOY	MATTE FINISH NICKEL PLATED	5	BRASS	MATTE FINISH NICKEL PLATED

CODE NO.(OLD)	DRAWN	DESIGNED	CHECKED	APPROVED	RELEASED
CL	D. Matsume 05·11·19	D. Matsume 05·11·19	E. Kurii 05·11·22	M. Sato 05·11·24	

SCALE 2 : 1	DRAWING NO. EDC4-007763-73	PART NO. HR10-7J-4P(73)
UNITS mm	HRS HIROSE ELECTRIC CO.,LTD.	CODE NO. CL110-0028-5-73 1/1

FORM NO.228

TO
R

Sep.1.2025 Copyright 2025 HIROSE ELECTRIC CO., LTD. All Rights Reserved.
In case of consideration for using Automotive equipment / device which demand high reliability, kindly contact our sales window correspondents.