Oct.1.2025 Copyright 2025 HIROSE ELECTRIC CO., LTD. All Rights Reserved.
In case of consideration for using Automotive equipment / device which demand high reliability, kindly contact our sales window correspondents.

	COUNT	DESCRIPTION OF REVISIONS	BY	CHKD	DATE		COUNT	DESCRIPTION OF REVISIONS	BY	CHKD	DATE
△					. .	△					. .
△					. .	△					. .
△					. .	△					. .

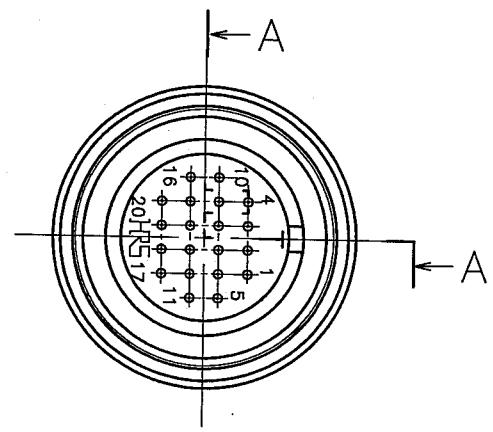

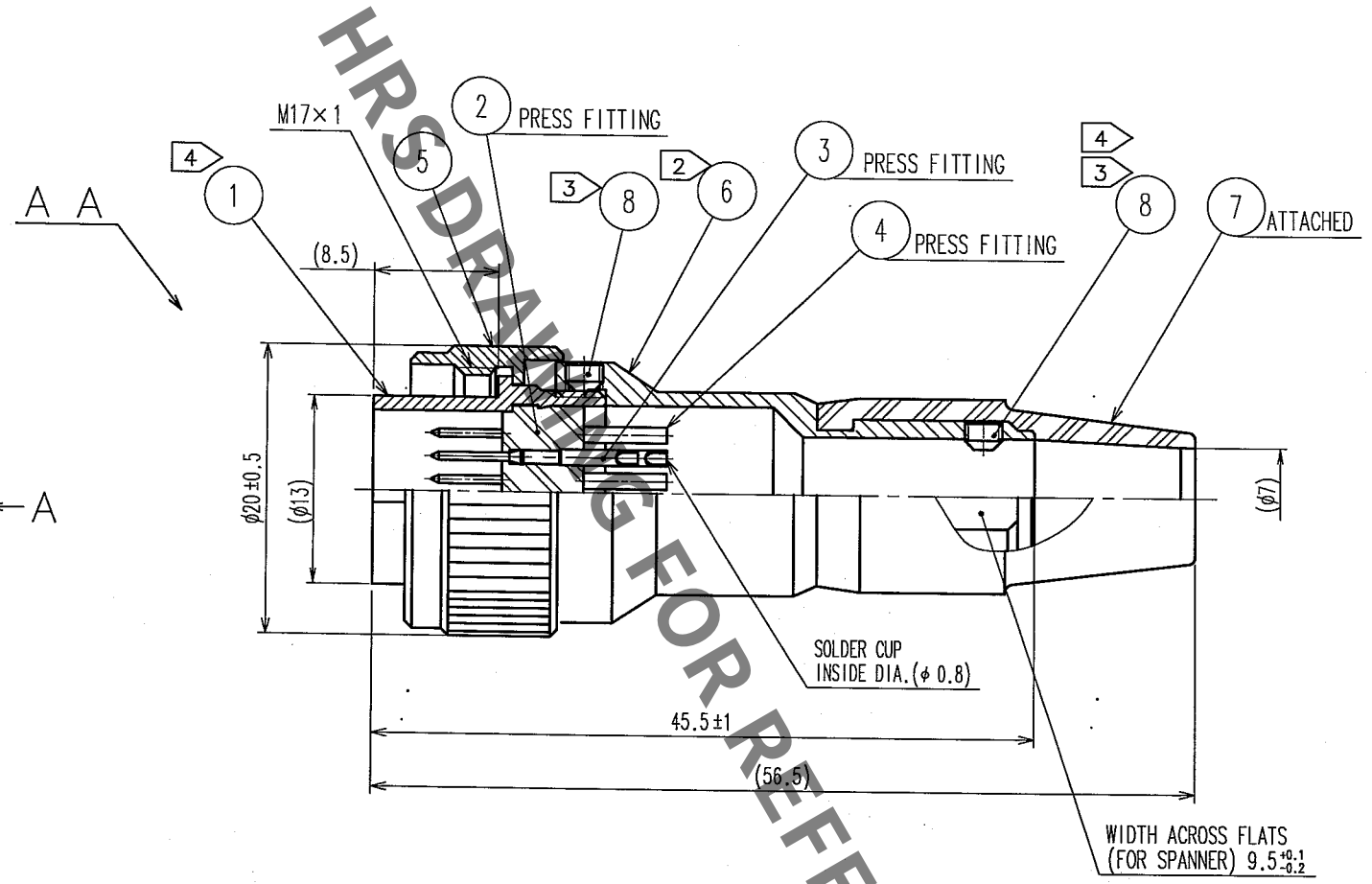

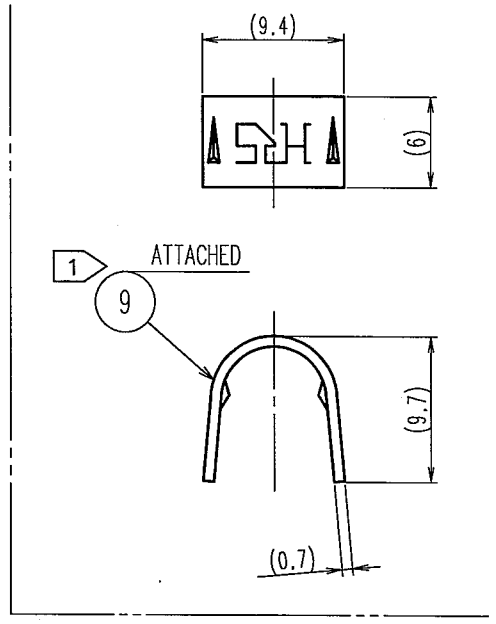

NOTE: 1 HAND CRIMPING TOOL,REF.NO.⑨:HR10A-TC-02(CL150-0041-2)
THE HOLE DIAMETER FOR CRIMPING : φ 7.0
2 THE RECOMMENDED CLAMP TORQUE,REF.NO.⑥: 2-2.5N・m.
3 ACROSS FLATS HEXAGON HEAD OF REF.NO.⑧: 1.27.
THE RECOMMENDED CLAMP TORQUE,REF.NO.⑧: 0.3-0.4N・m.
REF.NO.⑧SHALL BE TIGHTENED WITH ITS TIPS PRESSED INTO
THE DIMPLE AREA OF REF.NO.⑨.
4 LOCTITE 242,HENKEL JAPAN OR EQUIVALENT IS RECOMMENDED
TO PREVENT REF.NO.①AND⑧FROM LOOSENING.
5 ONE EXAMPLE OF THE ROTATION OF REF.NO.⑥TO REF.NO.① IS SHOWN.

NO.	MATERIAL	FINISH, REMARKS	NO.	MATERIAL	FINISH, REMARKS
5	BRASS	NICKEL PLATING			
4	BRASS	SILVER PLATING 2μm min.	9	BRASS	
3	BRASS		8	STEEL	NICKEL PLATING JIS B 1177 HEXAGON SOCKET SET SCREW M2.6x0.45x2
2	POLYAMIDE	(BLACK) UL94V-0	7	CR	(BLACK)
1	BRASS	NICKEL PLATING	6	BRASS	NICKEL PLATING

CODE NO.(OLD)	DRAWN	DESIGNED	CHECKED	APPROVED	RELEASED
	D. Matsuma '05・10・12	D. Matsuma '05・10・12	E. Kunii 05・10・13	M. Sato 05・10・14	

SCALE 2 : 1	DRAWING NO. EDC3-042375-73	PART NO. HR10A-13TPD-20P(73)
UNITS mm	HRS HIROSE ELECTRIC CO.,LTD.	CODE NO. CL110-1015-9-73 1/1

TO
R

HRS DRAWING FOR REFERENCE