May.1.2025 Copyright 2025 HIROSE ELECTRIC CO., LTD. All Rights Reserved.
In case of consideration for using Automotive equipment / device which demand high reliability, kindly contact our sales window correspondents.

	COUNT	DESCRIPTION OF REVISIONS	BY	CHKD	DATE		COUNT	DESCRIPTION OF REVISIONS	BY	CHKD	DATE
△					. .	△					. .
△					. .	△					. .
△					. .	△					. .

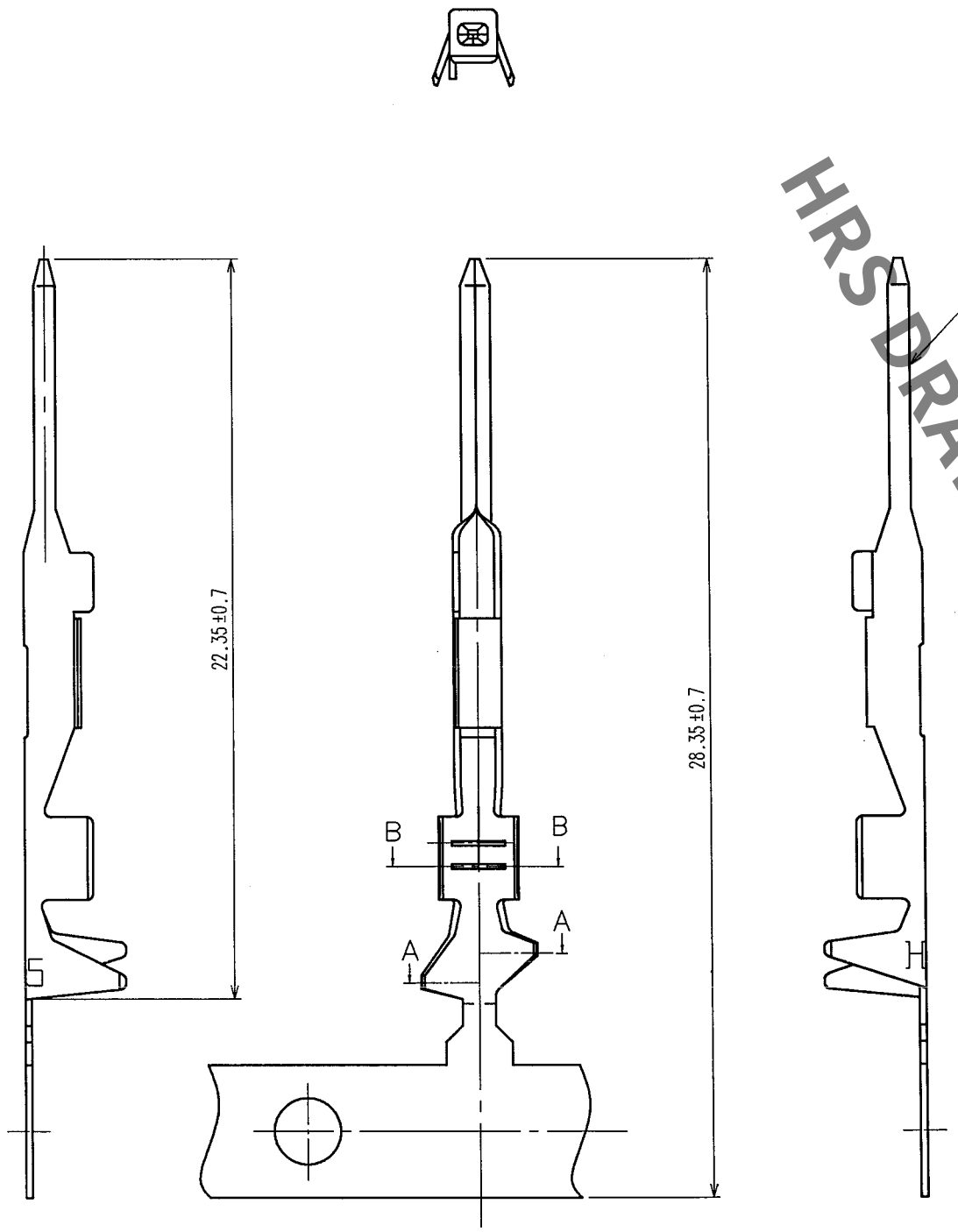

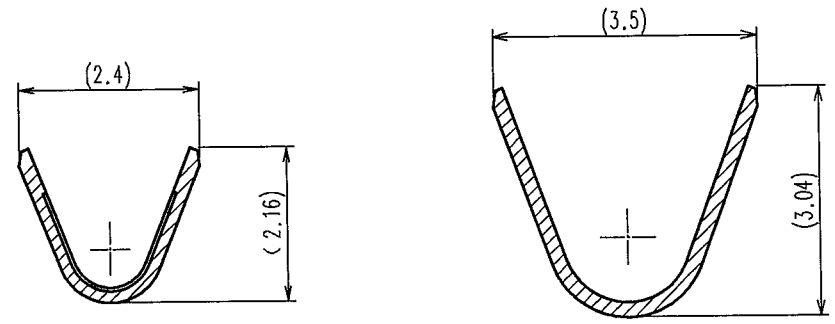

B-B(10:1)

A-A(10:1)

HRS DRAWING FOR REFERENCE

NOTES
1 PER REEL : 7000 CONTACTS.

NO.	MATERIAL	FINISH, REMARKS
1	CUPPER ALLOY	TIN PLATED

CODE NO.(OLD)	DRAWN	DESIGNED	CHECKED	APPROVED	RELEASED
CL?	M.OKADA '04.10.10	M.OKADA '04.10.10	K.Sato 04.10.12	K.Sato 04.10.12	. .

SCALE	1 : 1
UNITS	mm
DRAWING NO.	EDC3-165910
PART NO.	GT10SC-2022PCF
CODE NO.	CL760-0016-1
	1/1

HRS HIROSE ELECTRIC CO., LTD

FORM NO.229

TO
AMC