Aug.1.2025 Copyright 2025 HIROSE ELECTRIC CO., LTD. All Rights Reserved.
In case of consideration for using Automotive equipment / device which demand high reliability, kindly contact our sales window correspondents.

	COUNT	DESCRIPTION OF REVISIONS	BY	CHKD	DATE		COUNT	DESCRIPTION OF REVISIONS	BY	CHKD	DATE
1	3	RE-F-09671	K.N	H.Y	04.04.08						. .
2	1	DIS-F-000293	K.D	H.O	05.07.28						. .
					. .						. .

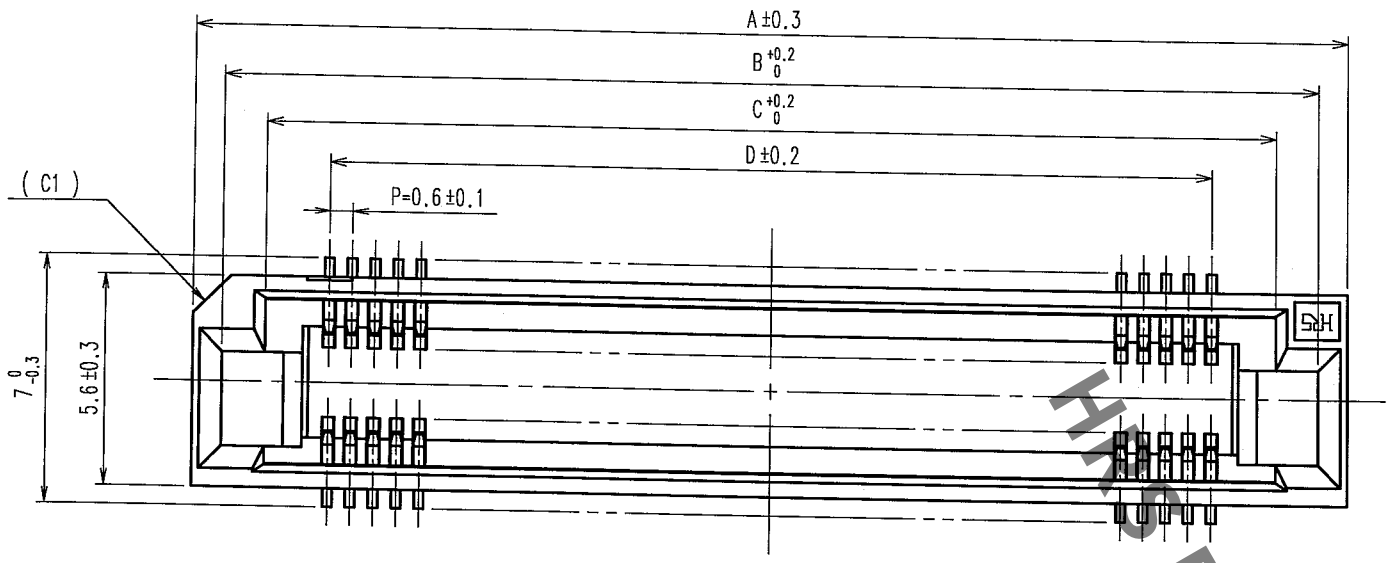

RECOMMENDED LAND PATTERN DIMENSION OF P.C.B. (MOUNTING SIDE)

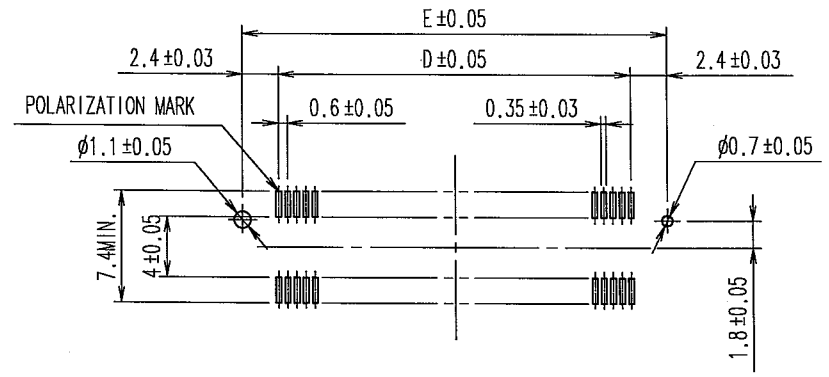

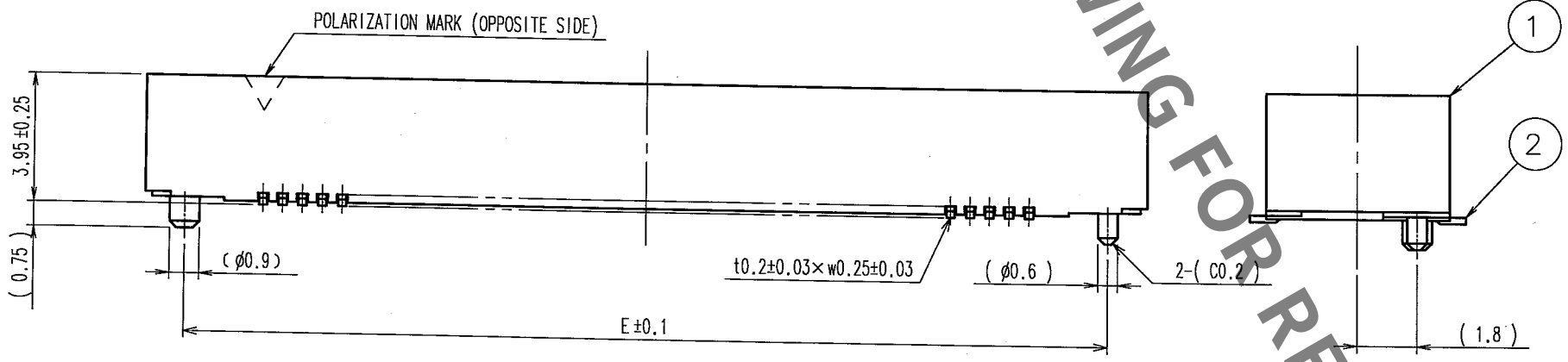

DIMENSION TABLE OF CONNECTOR AND P.C.B. LAND PATTERN.

PART No.	CODE No.	6	7	A	B	C	D	E
FX8C- 60S-SV(93)	CL578-0801-2-93	60	×	24.60	23.05	20.80	17.40	22.20
FX8C- 80S-SV(93)	CL578-0803-8-93	80	×	30.60	29.05	26.80	23.40	28.20
FX8C-100S-SV(93)	CL578-0805-3-93	100	×	36.60	35.05	32.80	29.40	34.20
FX8C-120S-SV(93)	CL578-0806-6-93	120	—	42.60	41.05	38.80	35.40	40.20
FX8C-140S-SV(93)	CL578-0807-9-93	140	—	48.60	47.05	44.80	41.40	46.20

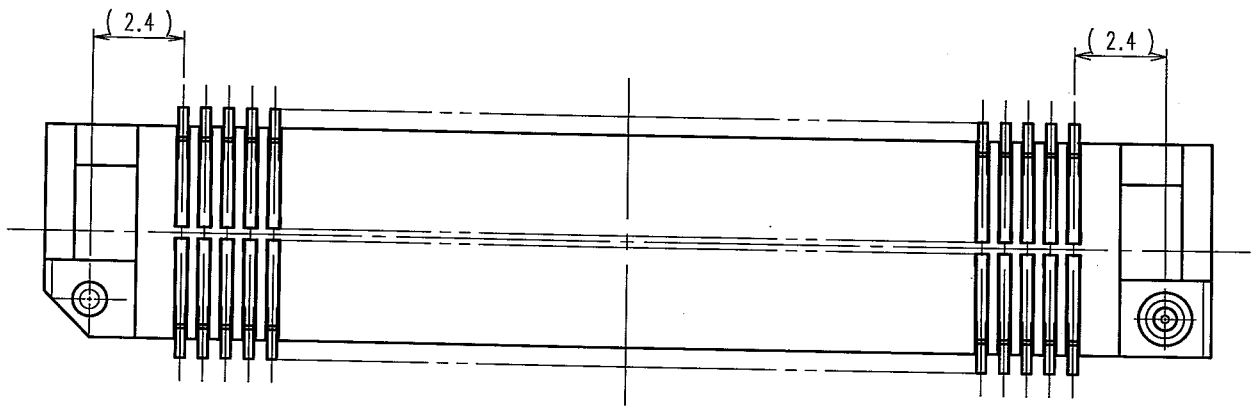

NOTE 1. LEAD CO-PLANARITY SHALL BE 0.1mm MAX.
2. EMBOSSED CARRIER TAPE PACKAGING SHALL BE APPLIED TO THIS PRODUCT. SEE NEXT PAGE FOR DETAILS.
3. THIS PRODUCT HAS TAPE FOR VACUUM PICKUP. SEE NEXT PAGE FOR DETAIL OF STICKING POSITION,ETC.
4. FOR MODIFICATION,ETC,PREVENTIVE HOLE FOR SINK MARK MAY BE ADDED ACCORDING TO CIRCUMSTANCES.
5. THE DIMENSIONS IN PARENTHESES ARE FOR REFERENCE.
6 NUMBER OF CONTACTS.
7 EXISTENCE
×:PRODUCED, -:NO PRODUCED

1 2

NO.	MATERIAL	FINISH, REMARKS	NO.	MATERIAL	FINISH, REMARKS
1	PPS	LIGHT BROWN (UL94V-0)	2	PHOSPHOR BRONZE	CONTACT AREA:GOLD 0.1μm min. LEAD AREA:GOLD FLASH UNDER PLATING:NICKEL 0.5μm min.

CODE NO.(OLD)	DRAWN	DESIGNED	CHECKED	APPROVED	RELEASED
CL	S.SUZUKI 03.02.07	K.NAKAMURA 03.02.17	H.OKAWA 03.02.18	Y.YOSHIMURA 03.02.19	. .

SCALE FREE
UNITS mm
DRAWING NO. EDC3-151022-23
HRS HIROSE ELECTRIC CO., LTD
PART NO. FX8C-**S-SV(93)
CODE NO. CL578
1/2

TO
PCK

HRS DRAWING FOR REFERENCE

Aug.1.2025 Copyright 2025 HIROSE ELECTRIC CO., LTD. All Rights Reserved.
In case of consideration for using Automotive equipment / device which demand high reliability, kindly contact our sales window correspondents.

	COUNT	DESCRIPTION OF REVISIONS	BY	CHKD	DATE		COUNT	DESCRIPTION OF REVISIONS	BY	CHKD	DATE
△					. .	△					. .
△					. .	△					. .
△					. .	△					. .

UNREELING DIRECTION

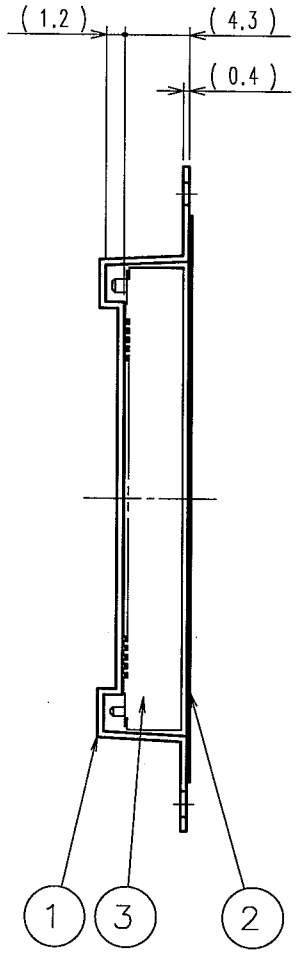

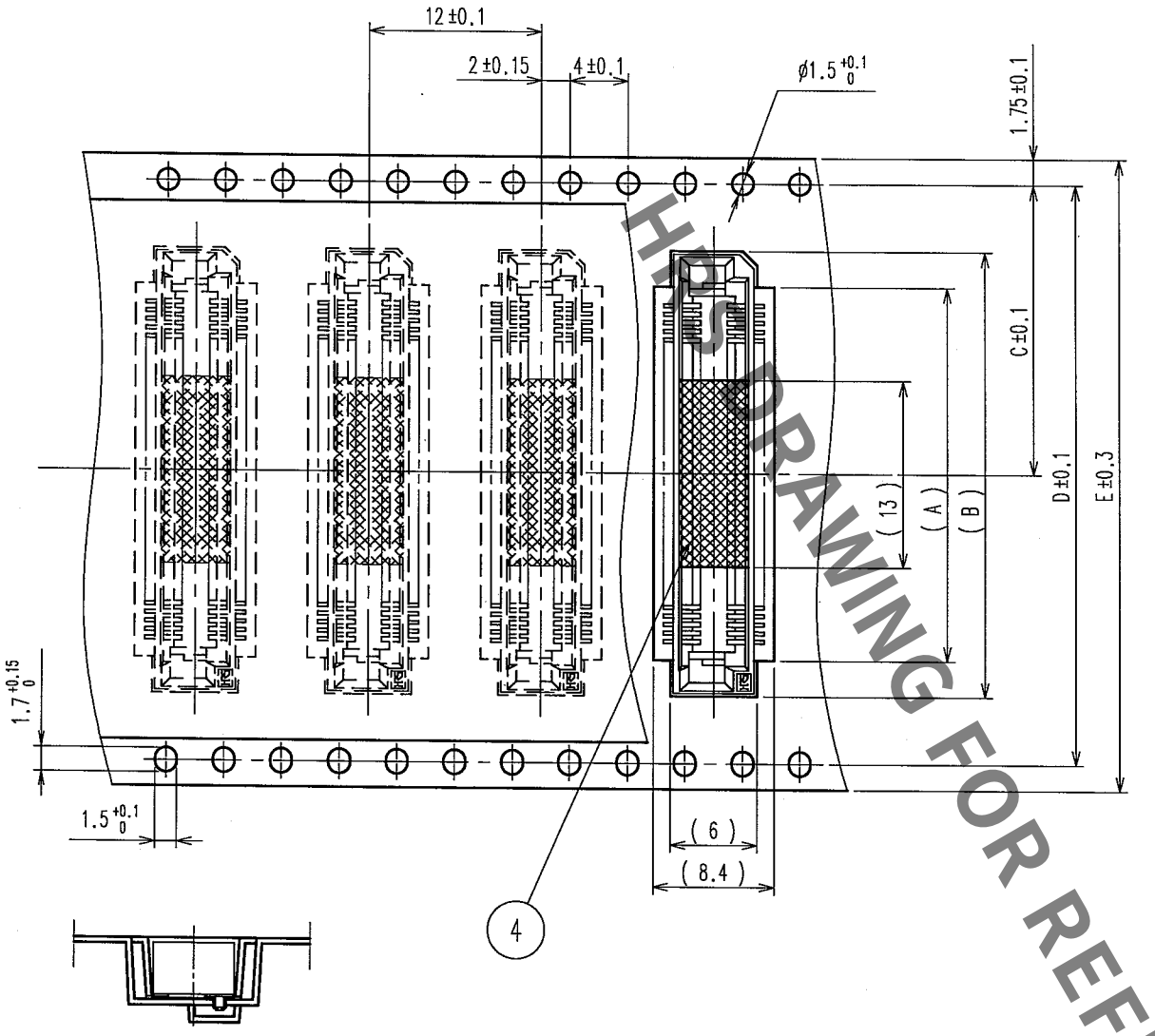

REEL DIMENSION

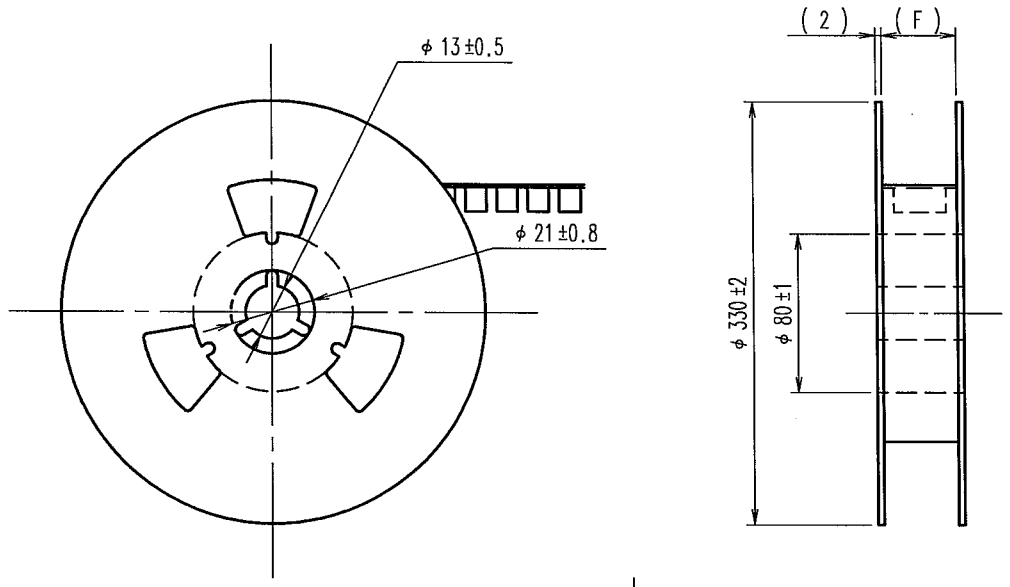

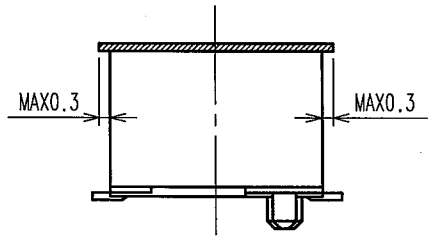

DETAIL OF TAPE FOR VACUUM PICKUP(5:1)

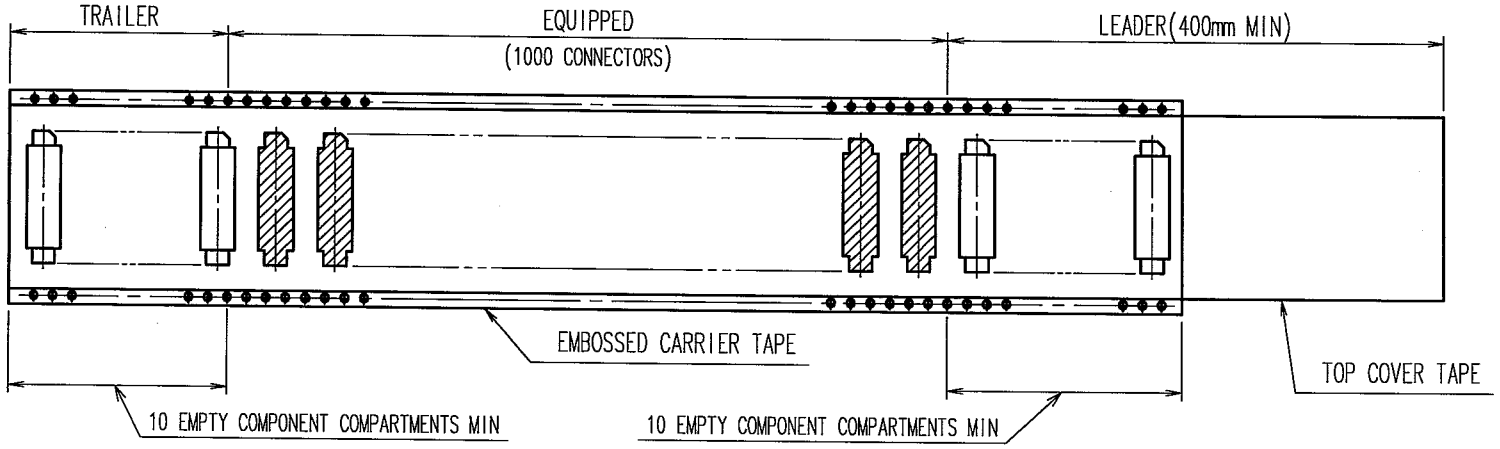

△1 DIMENSION TABLE OF EMBOSSED CARRIER TAPE AND REEL.

PART No.	CODE No.	2	3	A	B	C	D	E	F
FX8C- 60S-SV(93)	CL578-0801-2-93	60	×	20	25	20.2	40.4	44	44.4
FX8C- 80S-SV(93)	CL578-0803-8-93	80	×	26	31	20.2	40.4	44	44.4
FX8C-100S-SV(93)	CL578-0805-3-93	100	×	32	37	26.2	52.4	56	56.4
FX8C-120S-SV(93)	CL578-0806-6-93	120	—	38	43	26.2	52.4	56	56.4
FX8C-140S-SV(93)	CL578-0807-9-93	140	—	44	49	34.2	68.4	72	72.4

NOTE 1. 1 REEL : 1000 CONNECTORS
2 NUMBER OF CONTACTS
3 EXISTENCE
×:PRODUCED, -:NO PRODUCED

NO.	MATERIAL	FINISH, REMARKS	NO.	MATERIAL	FINISH, REMARKS
2	POLYESTER	(TOP COVER TAPE)	4	POLYIMIDE	(TAPE FOR VACUUM PICKUP)
1	PS △1	(EMBOSSED CARRIER TAPE)	3		(CONNECTOR)

CODE NO.(OLD)	DRAWN	DESIGNED	CHECKED	APPROVED	RELEASED
CL	S.SUZUKI 03.02.07	K.NAKAMURA 03.02.17	H.OKAWA 03.02.18	Y.YOSHIMURA 03.02.19	. .

SCALE FREE
UNITS mm

DRAWING NO. EDC3-151022-23

HRS HIROSE ELECTRIC CO., LTD

PART NO. FX8C-**S-SV(93)

CODE NO. CL578 2

TO
PCK

HRS DRAWING FOR REFERENCE