Sep.1.2025 Copyright 2025 HIROSE ELECTRIC CO., LTD. All Rights Reserved.
In case of consideration for using Automotive equipment / device which demand high reliability, kindly contact our sales window correspondents.

	COUNT	DESCRIPTION OF REVISIONS	BY	CHKD	DATE		COUNT	DESCRIPTION OF REVISIONS	BY	CHKD	DATE
△					. .	△					. .
△					. .	△					. .
△					. .	△					. .

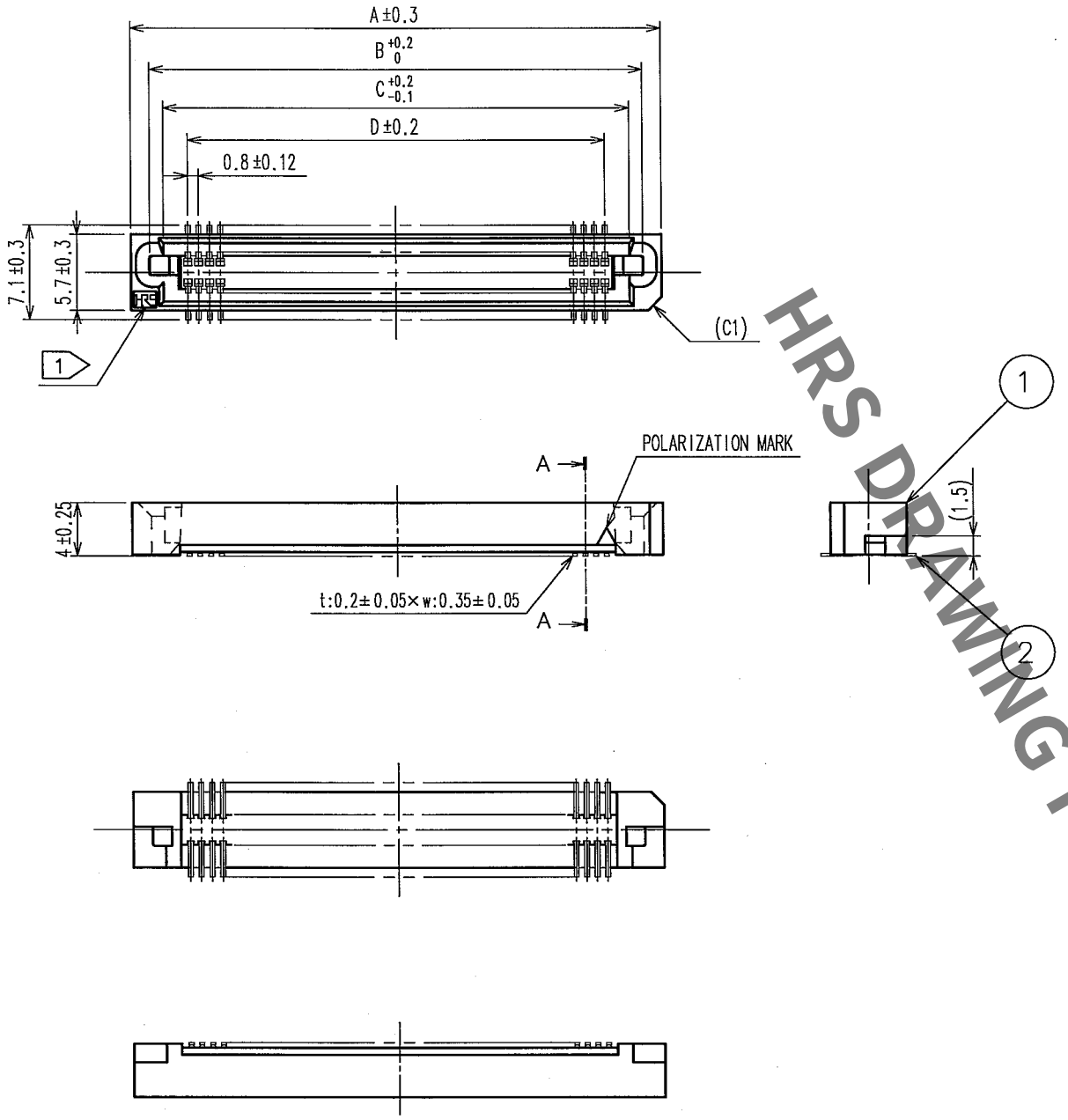

A-A(10:1)

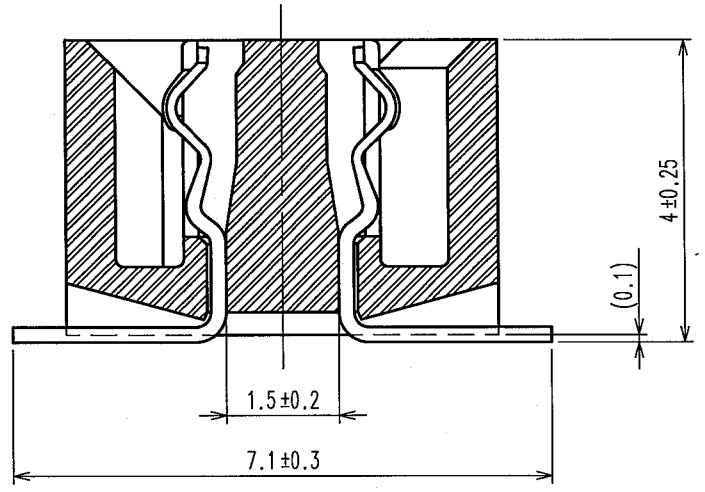

RECOMMENDED P.C.B. LAND PATTERN
(MOUNT SIDE)

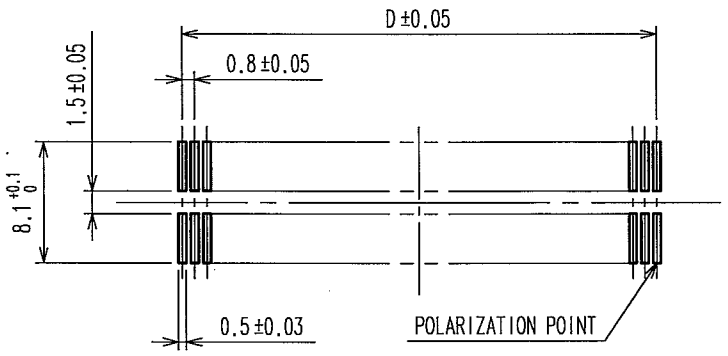

DIMENSION TABEL OF CONNECTOR AND P.C.B. LAND PATTERN

PART No.	CODE No.	6	A	B	C	D
FX6A- 20S-0.8SV(93)	CL576-0301-7-93	20	15.8	12.95	10.9	7.2
FX6A- 40S-0.8SV(93)	CL576-0303-2-93	40	23.8	20.95	18.9	15.2
FX6A- 50S-0.8SV(93)	CL576-0304-5-93	50	27.8	24.95	22.9	19.2
FX6A- 60S-0.8SV(93)	CL576-0305-8-93	60	31.8	28.95	26.9	23.2
FX6A- 80S-0.8SV(93)	CL576-0307-3-93	80	39.8	36.95	34.9	31.2

NOTE
1. HRS MARK SHALL BE OPTIONAL.
2. LEAD CO-PLANARITY SHALL BE 0.1 MAX.
3. EMBOSSED CARRIER TAPE PACKAGING SHALL BE APPLIED FOR THIS PRODUCT.
4. THIS PRODUCT HAS TAPE FOR VACUUM PICKUP.
   SEE NEXT PAGE FOR DETAIL OF STICKING POSITION,ETC.
5. FOR MODIFICATION,ETC,PREVENTIVE HOLE FOR SINK MARK MAY BE ADDED ACCORDING TO CIRCUMSTANCES.
6. NUMBER OF CONTACTS.
7. THE DIMENSIONS IN PARENTHESES ARE FOR REFERENCE.

HRS DRAWING FOR REFERENCE

NO.	MATERIAL	FINISH, REMARKS	NO.	MATERIAL	FINISH, REMARKS
1	POLYPHENYLENE SULFIDE	LIGHT BROWN (UL94V-0)	2	PHOSPHOR BRONZE	CONTACT AREA:GOLD 0.1μm min. LEAD AREA:TIN-PLATING 1μm min. UNDER PLATING:NICKLE 2μm min.

CODE NO.(OLD)	DRAWN	DESIGNED	CHECKED	APPROVED	RELEASED
	T.YANAGISAWA '05.08.04	J.Noda '05.8.5	C.Ozawa '05.08.05	H.Okawa 05.08.05	. .

SCALE FREE	DRAWING NO. EDC3-152949-23	PART NO. FX6A-*S-0.8SV(93)
UNITS mm	HRS HIROSE ELECTRIC CO., LTD	CODE NO. CL576 1/2

TO
PCK

FORM NO.229

Sep.1.2025 Copyright 2025 HIROSE ELECTRIC CO., LTD. All Rights Reserved.
In case of consideration for using Automotive equipment / device which demand high reliability, kindly contact our sales window correspondents.

	COUNT	DESCRIPTION OF REVISIONS	BY	CHKD	DATE		COUNT	DESCRIPTION OF REVISIONS	BY	CHKD	DATE
△					. .	△					. .
△					. .	△					. .
△					. .	△					. .

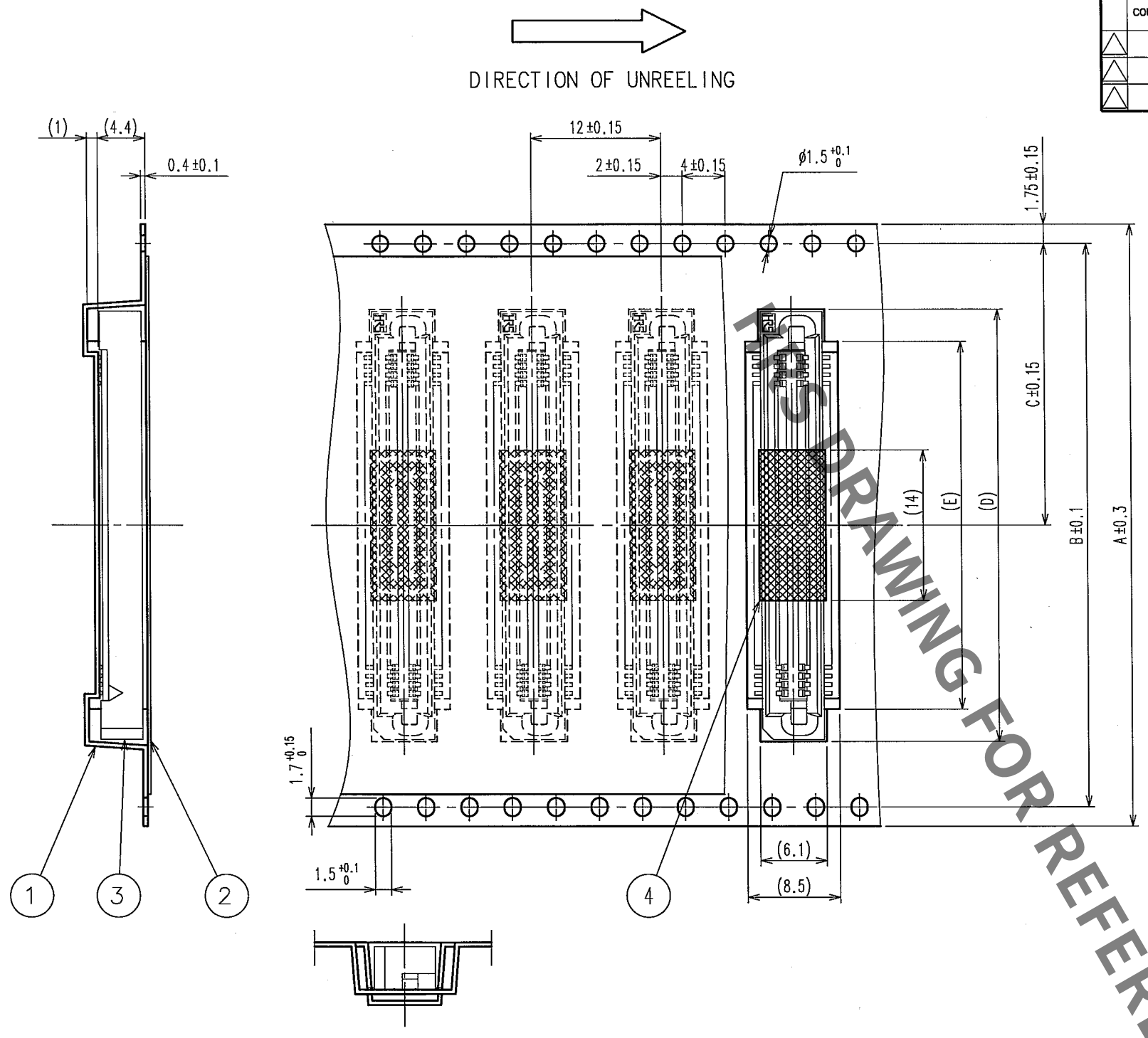

STYLE AMD DIMENSIONS OF REEL(FREE)

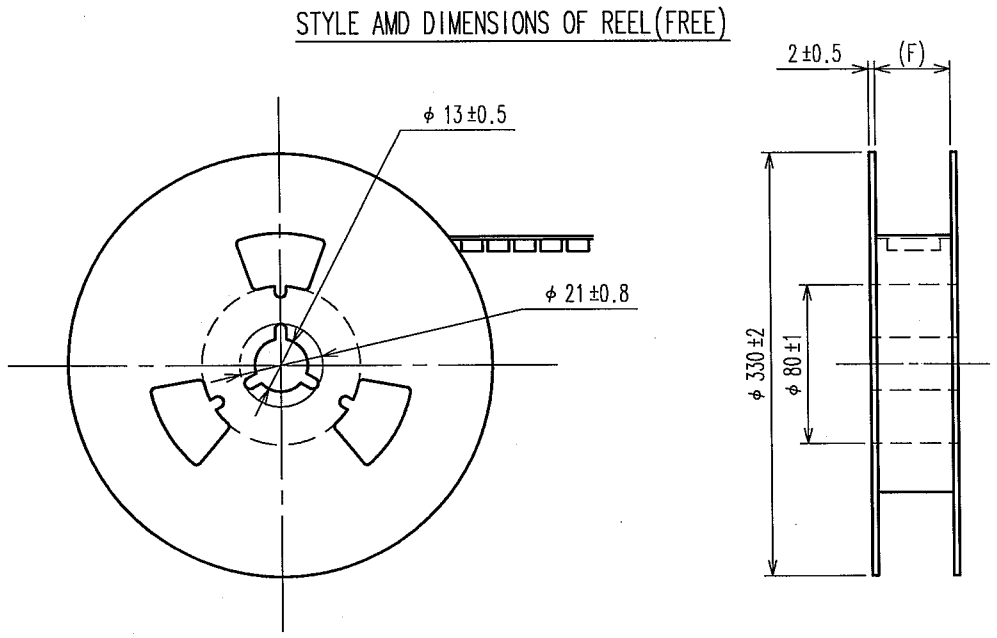

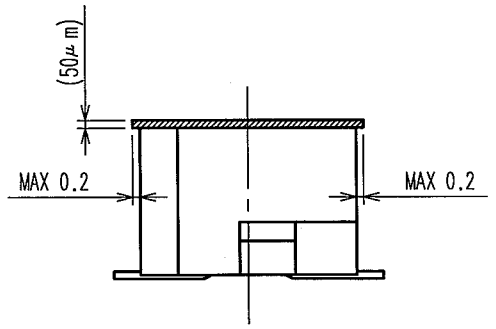

DETAIL OF TAPE FOR VACUUM PICK-UP(5:1)

DIMENSION TABLE OF EMBOSSED CARRIER TAPE AND REEL.

PARE No.	CODE No.	3>	A	B	C	D	E	F
FX6A- 20S-0.8SV(93)	CL576-0301-7-93	20	24.0	–	11.5	16.2	10.2	24.4
FX6A- 40S-0.8SV(93)	CL576-0303-2-93	40	44.0	40.4	20.2	24.2	18.2	44.4
FX6A- 50S-0.8SV(93)	CL576-0304-5-93	50	44.0	40.4	20.2	28.2	20.2	44.4
FX6A- 60S-0.8SV(93)	CL576-0305-8-93	60	44.0	40.4	20.2	32.2	26.2	44.4
FX6A- 80S-0.8SV(93)	CL576-0307-3-93	80	56.0	52.4	26.2	40.2	34.2	58.0

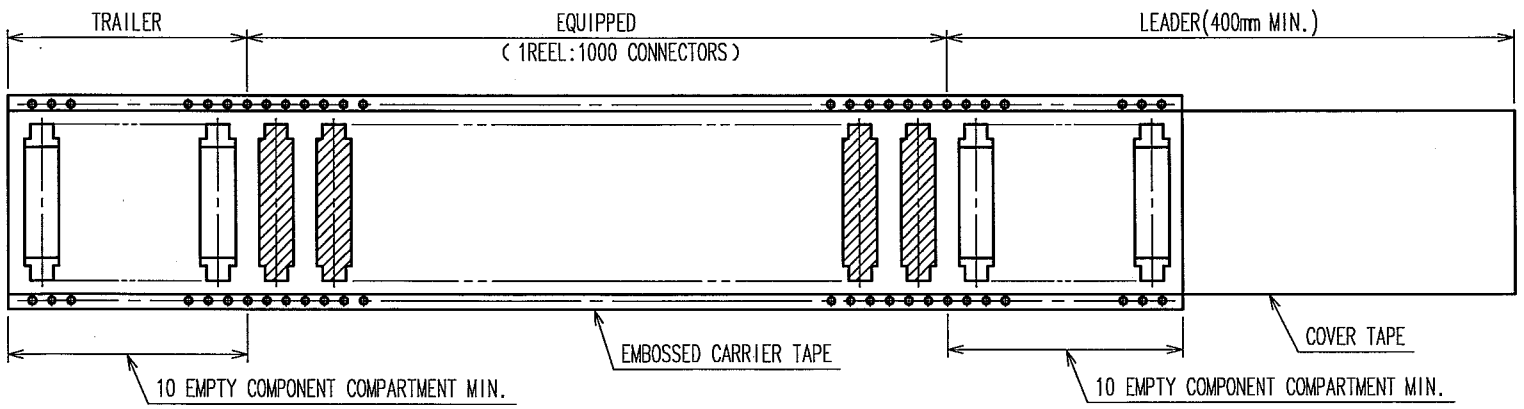

NO.	MATERIAL	FINISH, REMARKS	NO.	MATERIAL	FINISH, REMARKS
2	POLYESTER	COVER TAPE	4	POLYIMIDE	TAPE FOR VACUUM PICK-UP
1	POLYSTYRENE	EMBOSSED CARRIER TAPE	3		(CONNECTOR)

NOTE 1 THE DIMENSIONS IN PARENTHESES ARE FOR REFERENCE.
2 1REEL : 1000 CONNECTORS.
3> NUMBER OF CONTACTS.

TO
PCK

CODE NO.(OLD)	DRAWN	DESIGNED	CHECKED	APPROVED	RELEASED
	T.YANAGISAWA '05.08.04	J. Noda '05.8.5	K.C. Ogawa '05.08.05	H. Okawa 05-08-05	. .

SCALE FREE
UNITS mm

DRAWING NO. EDC3-152949-23

HRS HIROSE ELECTRIC CO., LTD

PART NO. FX6A-*S-0.8SV(93)

CODE NO. CL576

2/

FORM NO.229

HIS DRAWING FOR REFERENCE