Aug.1.2025 Copyright 2025 HIROSE ELECTRIC CO., LTD. All Rights Reserved.
In case of consideration for using Automotive equipment / device which demand high reliability, kindly contact our sales window correspondents.

| | COUNT | DESCRIPTION OF REVISIONS | BY | CHKD | DATE | | COUNT | DESCRIPTION OF REVISIONS | BY | CHKD | DATE |
|---|---|---|---|---|---|---|---|---|---|---|---|
| △ | | | | | . . | △ | | | | | . . |
| △ | | | | | . . | △ | | | | | . . |
| △ | | | | | . . | △ | | | | | . . |

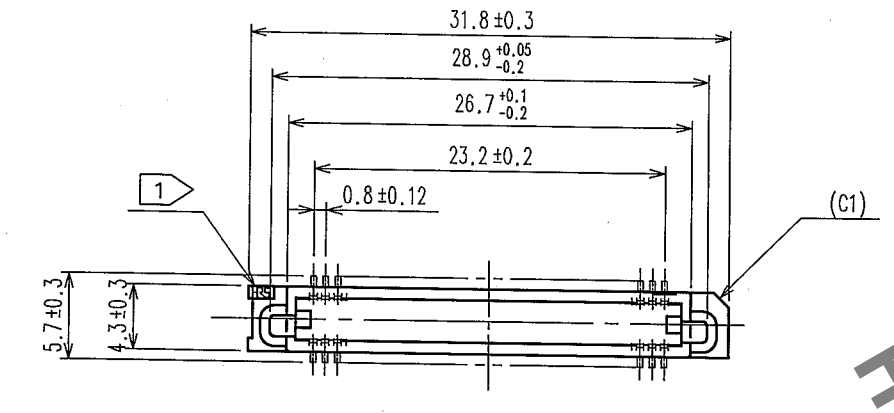


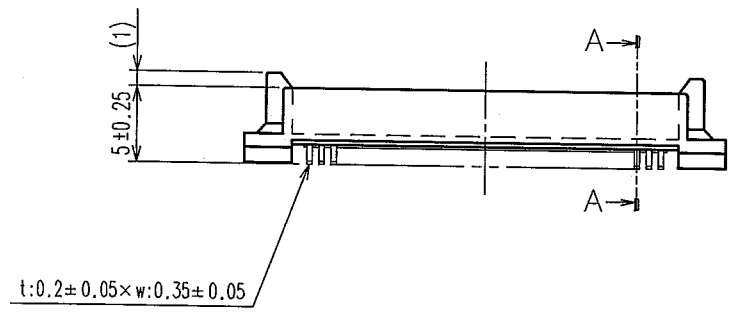


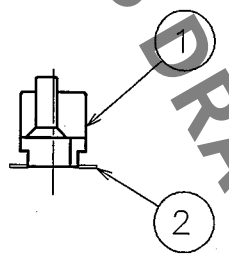


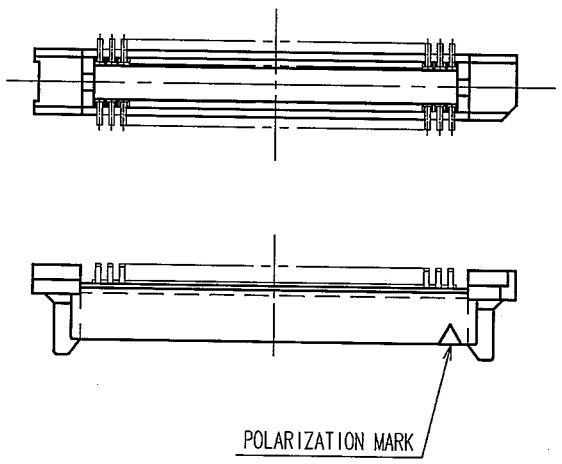


A-A(10:1)

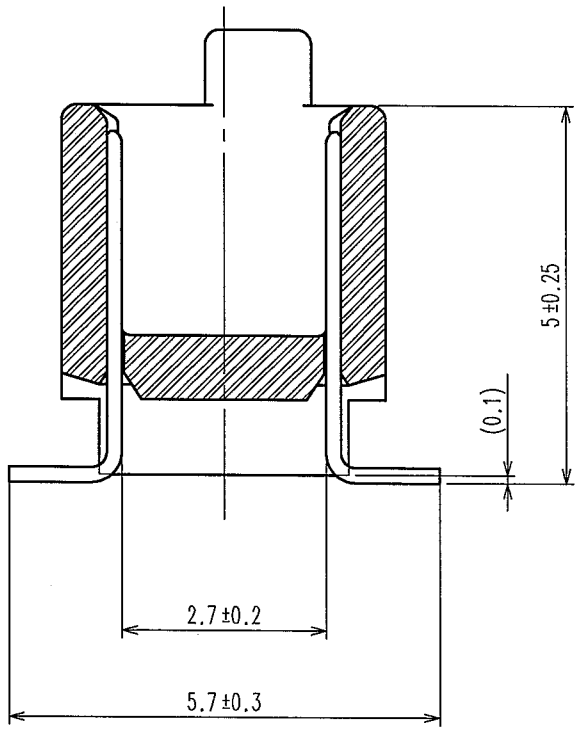


NOTE 1 HRS MARK SHALL BE OPTIONAL.
2 LEAD CO-PLANARITY SHALL BE 0.1mm MAX.
3 THE DIMENSIONS IN PARENTHESES ARE FOR REFERENCE.
4 EMBOSSED CARRIER TAPE PACKAGING SHALL BE APPLIED FOR THIS PRODUCT.
5 FOR MODIFICATION,ETC,PREVENTIVE HOLE FOR SINK MARK MAY BE ADDED ACCORDING TO CIRCUMSTANCES.

RECOMMENDED P.C.B. LAND PATTERN (MOUNT SIDE)

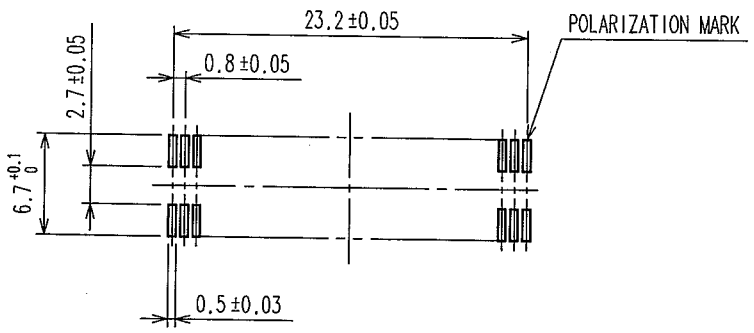


HRS DRAWING FOR REFERENCE

| NO. | MATERIAL | FINISH, REMARKS |
|---|---|---|
| 1 | POLYPHENYLENE SULFIDE | LIGHT BROWN UL94V-0 |
| 2 | PHOSPHOR BRONZE | CONTACT AREA : GOLD 0.1μm min.<br>LEAD AREA : TIN-PLATING 1μm min.<br>UNDER PLATING : NICKEL 1μm min. |

| CODE NO.(OLD) | DRAWN | DESIGNED | CHECKED | APPROVED | RELEASED |
|---|---|---|---|---|---|
| CL | Y.AOYAGI '05.09.15 | T Maeda '05.09.26 | J.C.Ogawa '05.09.26 | H.Okawa '05.09.26 | . . |

SCALE 2 : 1
UNITS mm

DRAWING NO. EDC3-071325-22

PART NO. FX6A-60P-0.8SV1(92)

HRS HIROSE ELECTRIC CO., LTD

CODE NO. CL576-0225-0-92

1/2

| TO |
|---|
| |
| |
| |
| |

Aug.1.2025 Copyright 2025 HIROSE ELECTRIC CO., LTD. All Rights Reserved.
In case of consideration for using Automotive equipment / device which demand high reliability, kindly contact our sales window correspondents.

| | COUNT | DESCRIPTION OF REVISIONS | BY | CHKD | DATE | | COUNT | DESCRIPTION OF REVISIONS | BY | CHKD | DATE |
|---|---|---|---|---|---|---|---|---|---|---|---|
| △ | | | | | . . | △ | | | | | . . |
| △ | | | | | . . | △ | | | | | . . |
| △ | | | | | . . | △ | | | | | . . |

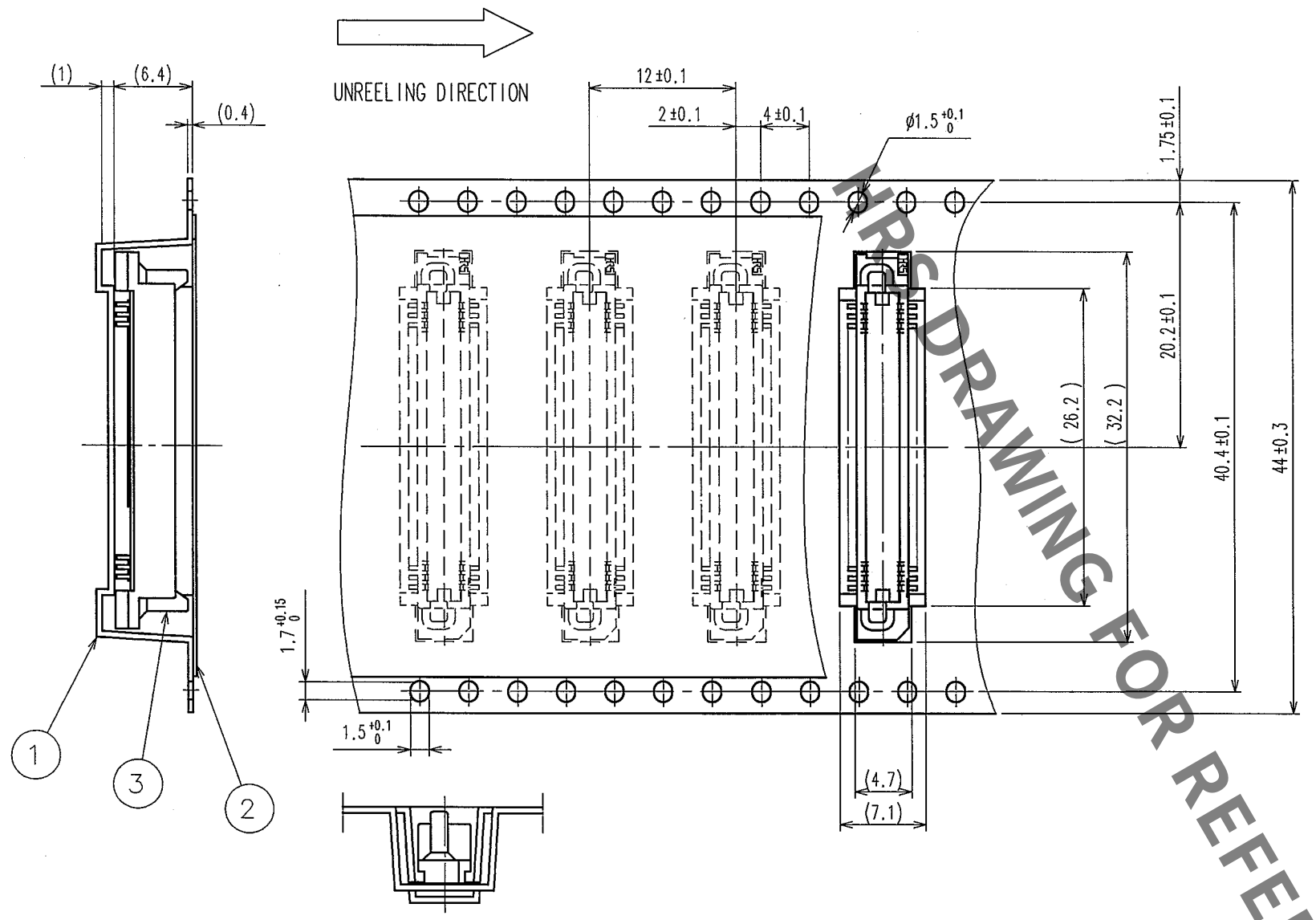


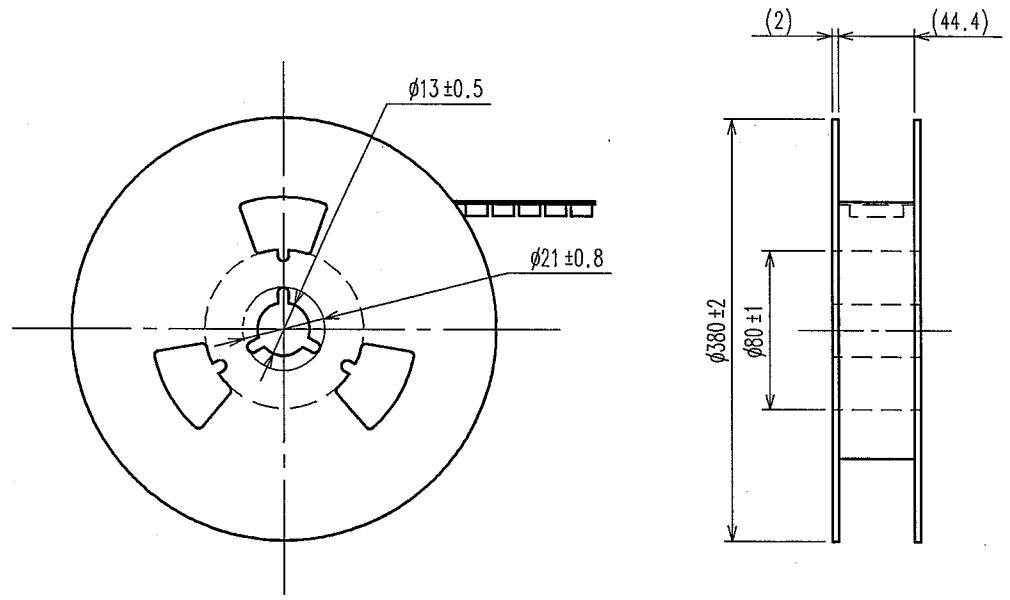


REEL DIMENSION (FREE)

NOTE 1 THE DIMENSIONS IN PARENTHESES ARE FOR REFERENCE.
2 1REEL:1000 CONNECTORS.

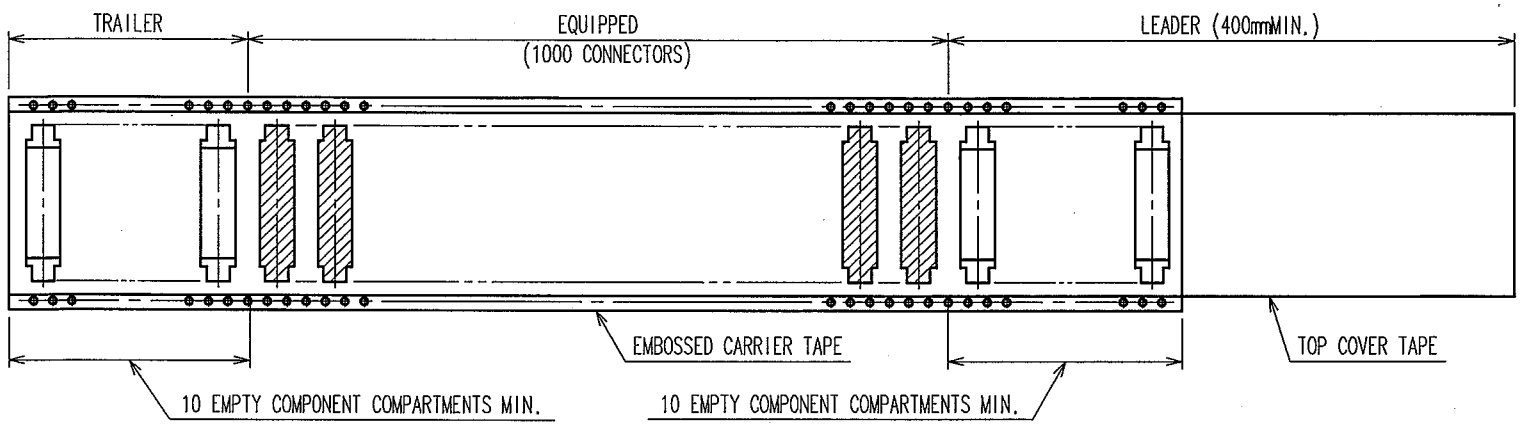


| NO. | MATERIAL | FINISH, REMARKS | NO. | MATERIAL | FINISH, REMARKS |
|---|---|---|---|---|---|
| 2 | POLYESTER | TOP COVER TAPE | | | |
| 1 | POLYSTYRENE | EMBOSSED CARRIER TAPE | 3 | | (CONNECTOR) |

| CODE NO.(OLD) | DRAWN | DESIGNED | CHECKED | APPROVED | RELEASED |
|---|---|---|---|---|---|
| CL | Y.AOYAGI '05.09.15 | J.Moda '05.09.26 | K.Ozawa '05.09.26 | H.Okawa '05.09.26 | . . |

SCALE 2 : 1
UNITS mm

DRAWING NO. EDC3-071325-22

HRS HIROSE ELECTRIC CO., LTD

PART NO. FX6A-60P-0.8SV1(92)

CODE NO. CL576-0225-0-92 2/

TO

FOR REFERENCE