Oct.1.2025 Copyright 2025 HIROSE ELECTRIC CO., LTD. All Rights Reserved.
In case of consideration for using Automotive equipment / device which demand high reliability, kindly contact our sales window correspondents.

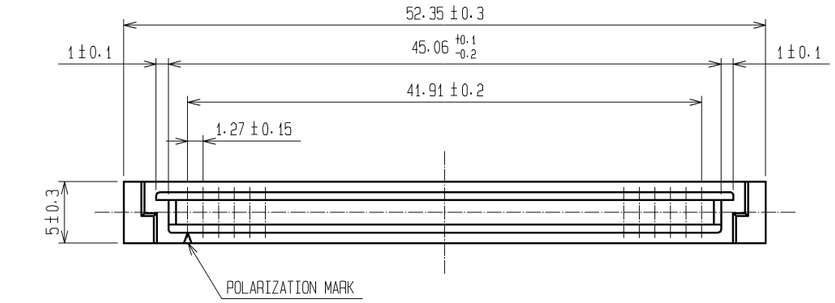

RECOMMENDED PC BOARD HOLE PATTERN
(MOUNTING SIDE)

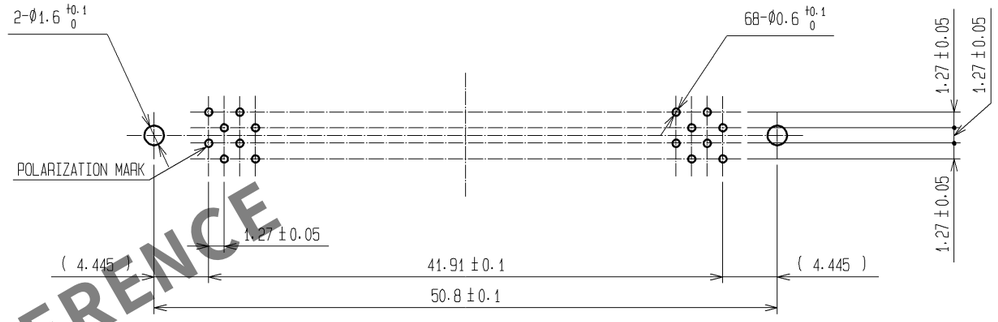

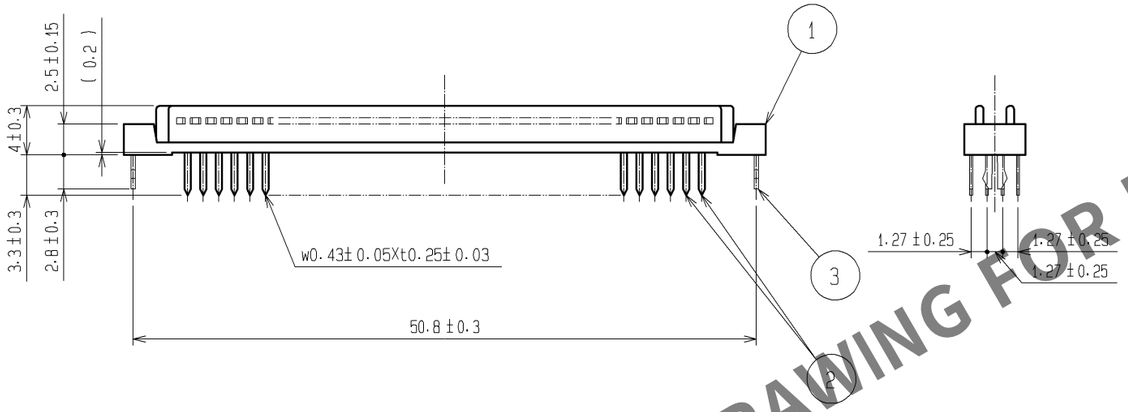

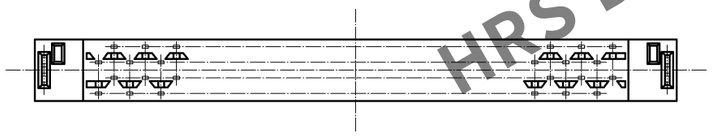

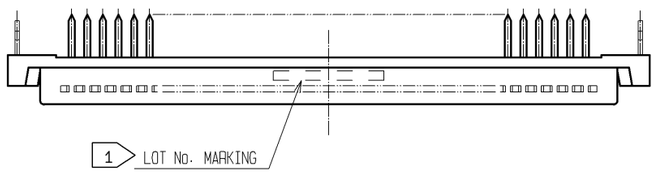

HRS DRAWING FOR REFERENCE

NOTES 1 LOT No. SHALL BE INDICATED AT OPTIONAL POSITION.
2 THE DIMENSIONS IN PARENTHESES ARE FOR REFERENCE.

NO.	MATERIAL	FINISH , REMARKS
3	PHOSPHOR BRONZE	TIN-PLATING
1	POLYAMIDE	BEIGE UL94V-0

NO.	MATERIAL	FINISH , REMARKS
3	PHOSPHOR BRONZE	CONTACT AREA:GOLD 0.2μm min.
		DIP AREA:TIN-PLATING 1.2μm min.
		UNDER PLATING:NICKEL 1μm min.

UNITS	SCALE	COUNT	DESCRIPTION OF REVISIONS	DESIGNED	CHECKED	DATE
mm	2 : 1					

HRS HIROSE ELECTRIC CO., LTD.

APPROVED	: HS. OKAWA	10. 11. 05	DRAWING NO.	EDC3-082923-21
CHECED	: HT. YAMAGUCHI	10. 11. 05	PART NO.	FX4C-68P-1.27DSAL(71)
DESIGNED	: SY. KAMIGA	10. 11. 05		
DRAWN	: YJ. ASAO	10. 11. 05	CODE NO.	CL574-0056-2-71

1/1

FORM HC0011-5-7