Oct.1.2025 Copyright 2025 HIROSE ELECTRIC CO., LTD. All Rights Reserved.
In case of consideration for using Automotive equipment / device which demand high reliability, kindly contact our sales window correspondents.

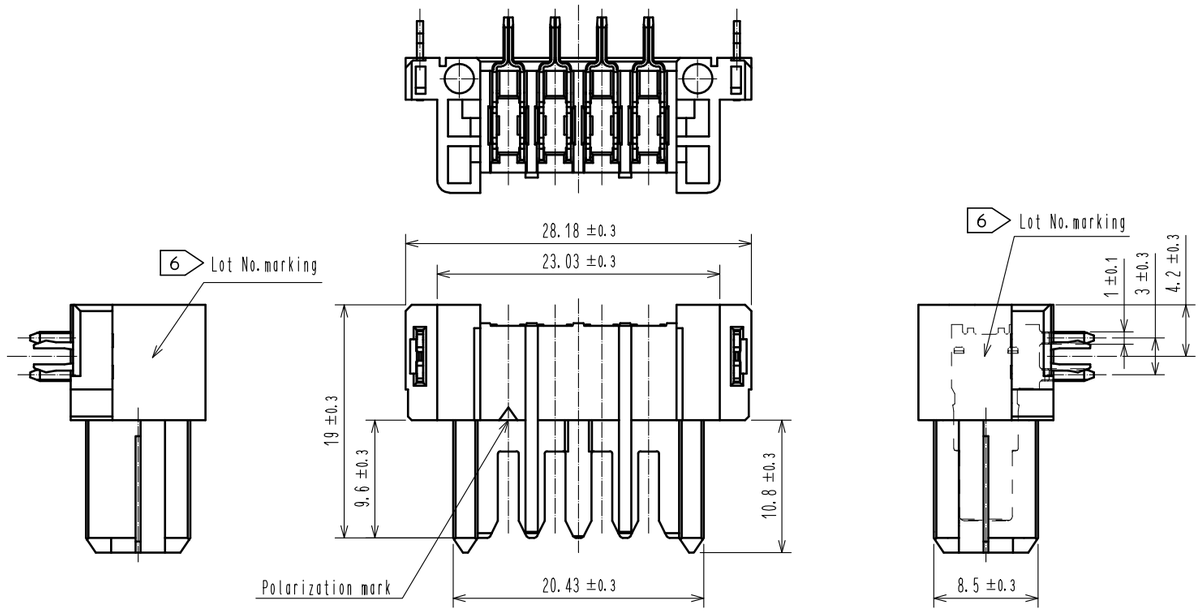


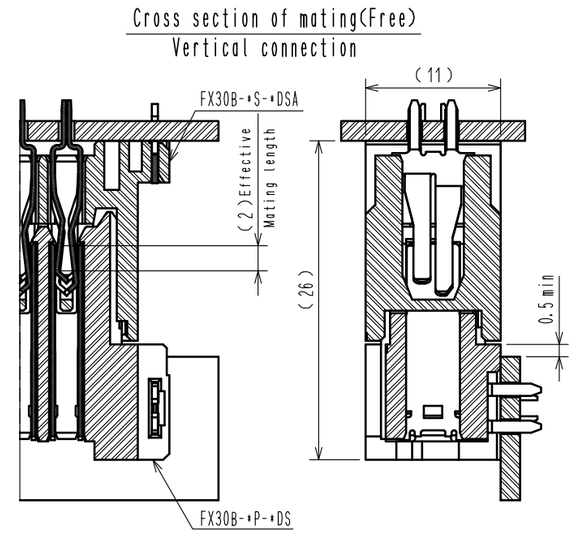


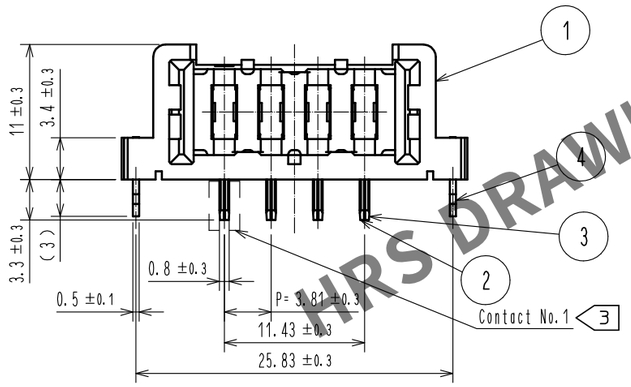


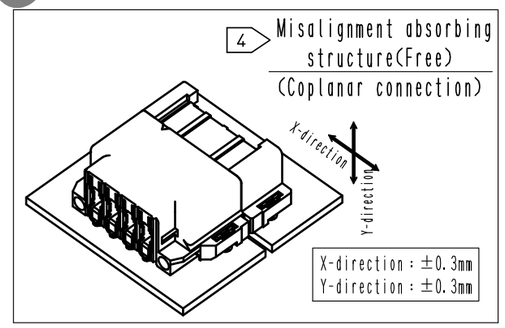


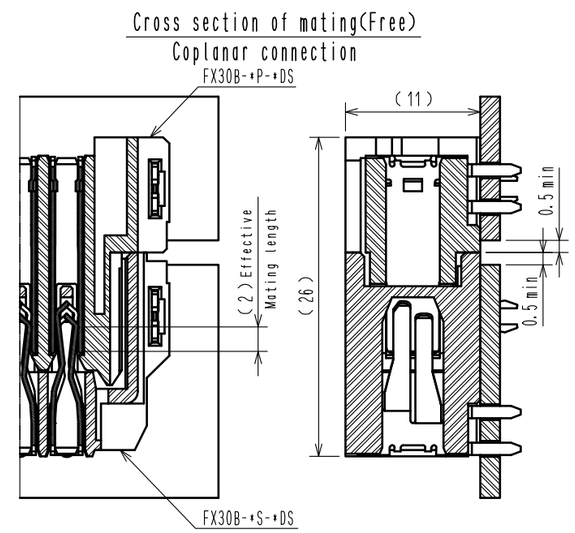


HRS DRAWING FOR REFERENCE

Note
1. This product is packaged in tray.(24pcs/tray)
2. Blemish and hit mark can be occured through out the manufacturing process whitch dosen't affect quality level. Also, black spot could be observed on the surface of housing.
3. For the contact No., adjacent two pairs of leads placed back-to-back (4 leads in total) compose one line.
4. Misalignment absorbing range:±0.3mm max.
5. The dimension in parentheses are for references.
6. Lot No. is indicated at either one of the position as shown.
7. Pay attention to the recommended PCB thickness and finished through-hole dimensions. Low retention force to PCB could induce angled mounting due to the unbalanced center of the connector.
8. UL(File No.E52653) C-UL(File No.E52653) TUV(Certificate No.R50275872) authorization article.

| NO. | MATERIAL | FINISH , REMARKS |
|---|---|---|
| 2 | COPPER ALLOY | CONTACT AREA:GOLD-PLATING 0.1μm<br>LEAD AREA:TIN-PLATING 1.0μm<br>UNDER PLATING:NICKEL 1.0μm |
| 1 | POLYAMIDE | BLACK UL94V-0 |

| NO. | MATERIAL | FINISH , REMARKS |
|---|---|---|
| 5 | POLYSTYRENE | |
| 4 | PHOSPHOR BRONZE | TIN-PLATING 3.0μm<br>UNDER PLATING:NICKEL 1.0μm |
| 3 | COPPER ALLOY | CONTACT AREA:GOLD-PLATING 0.1μm<br>LEAD AREA:TIN-PLATING 1.0μm<br>UNDER PLATING:NICKEL 1.0μm |

| UNITS | SCALE | COUNT | DESCRIPTION OF REVISIONS | DESIGNED | CHECKED | DATE |
|---|---|---|---|---|---|---|
| mm | 2 : 1 | 1 | DIS-F-00006019 | AK. IWAHORI | HT. YAMAGUCHI | 20200406 |

HIROSE ELECTRIC CO., LTD.

| | | |
|---|---|---|
| APPROVED | HS. OKAWA | 20130313 |
| CHECED | KI. HIROKAWA | 20130312 |
| DESIGNED | DK. AIMOTO | 20130311 |
| DRAWN | DK. AIMOTO | 20130311 |

| | |
|---|---|
| DRAWING NO. | EDC3-347270-00 |
| PART NO. | FX30B-4P-3.81DS |
| CODE NO. | CL570-3402-2-00 |

1/2

FORM HC0011-5-7_AN

Oct.1.2025 Copyright 2025 HIROSE ELECTRIC CO., LTD. All Rights Reserved.
In case of consideration for using Automotive equipment / device which demand high reliability, kindly contact our sales window correspondents.

Recommended hole pattern dimension of PCB(5:1)
(Connector mounting side, PCB thickness:t=1.6mm) 7

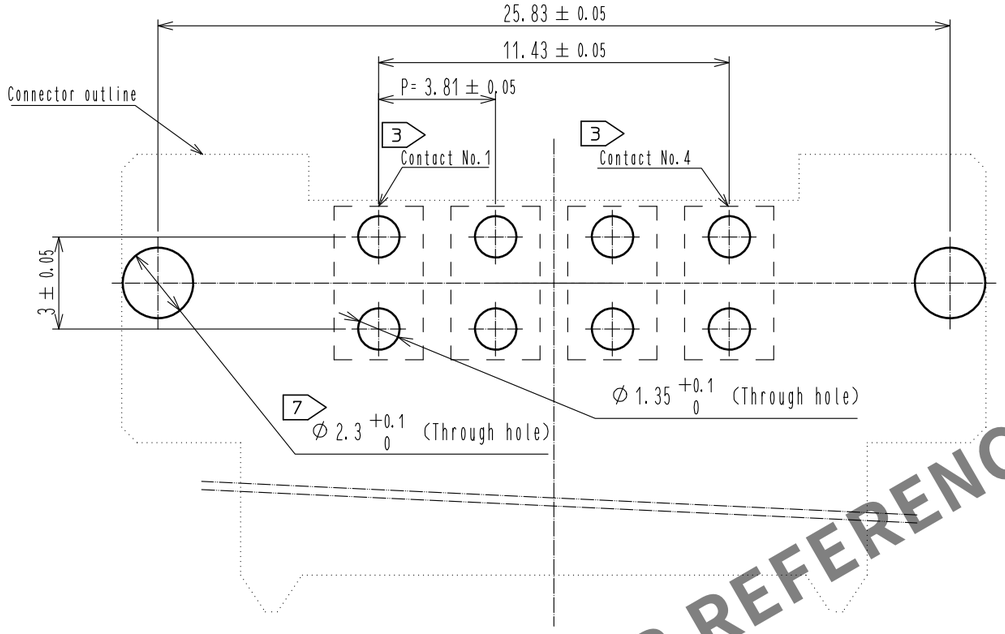


1 Drawing for packaging(1:2)

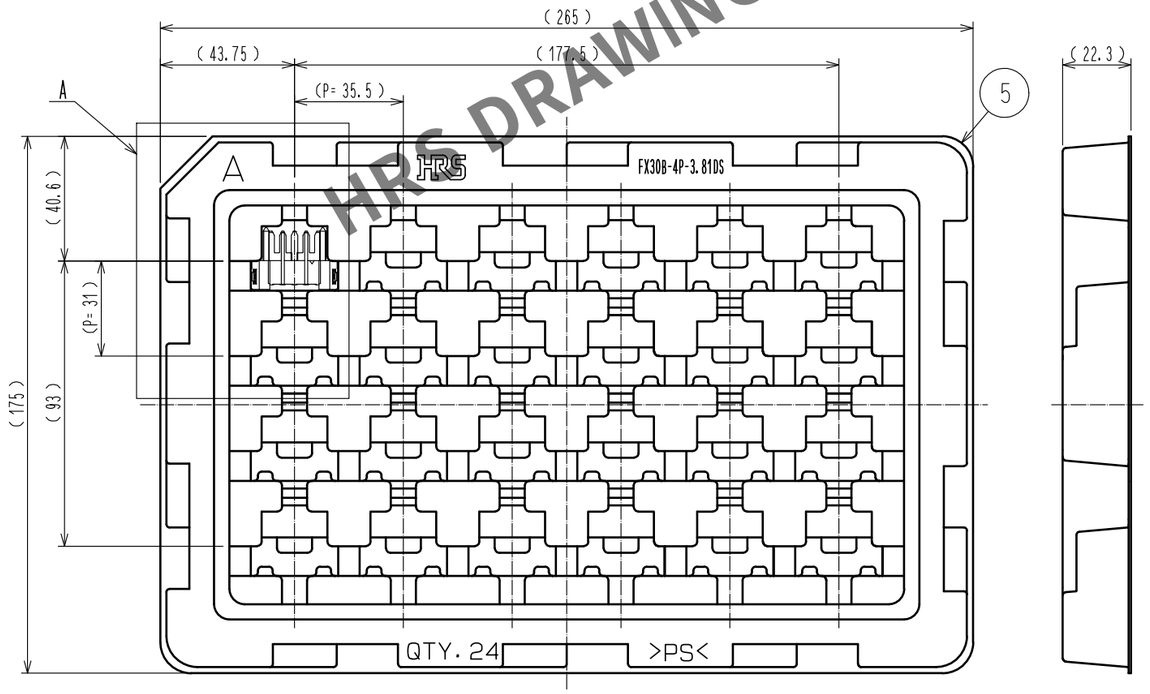


A(1:1)

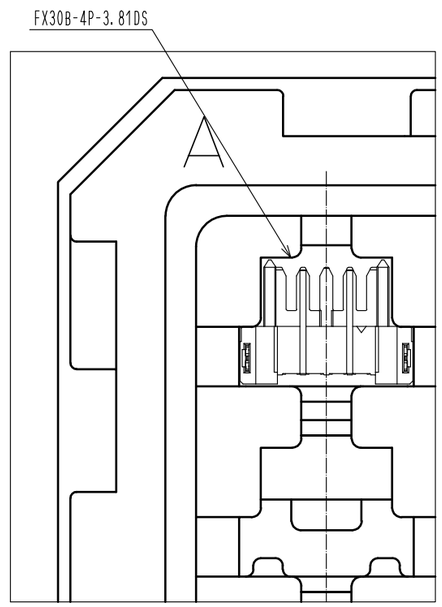


HRS DRAWING FOR REFERENCE

| | | |
|---|---|---|
| HRS | DRAWING NO. | EDC3-347270-00 |
| | PART NO. | FX30B-4P-3.81DS |
| | CODE NO. | CL570-3402-2-00 |

2 2/2

FORM HC0011-5-8_AN