Oct.1.2025 Copyright 2025 HIROSE ELECTRIC CO., LTD. All Rights Reserved.
In case of consideration for using Automotive equipment / device which demand high reliability, kindly contact our sales window correspondents.

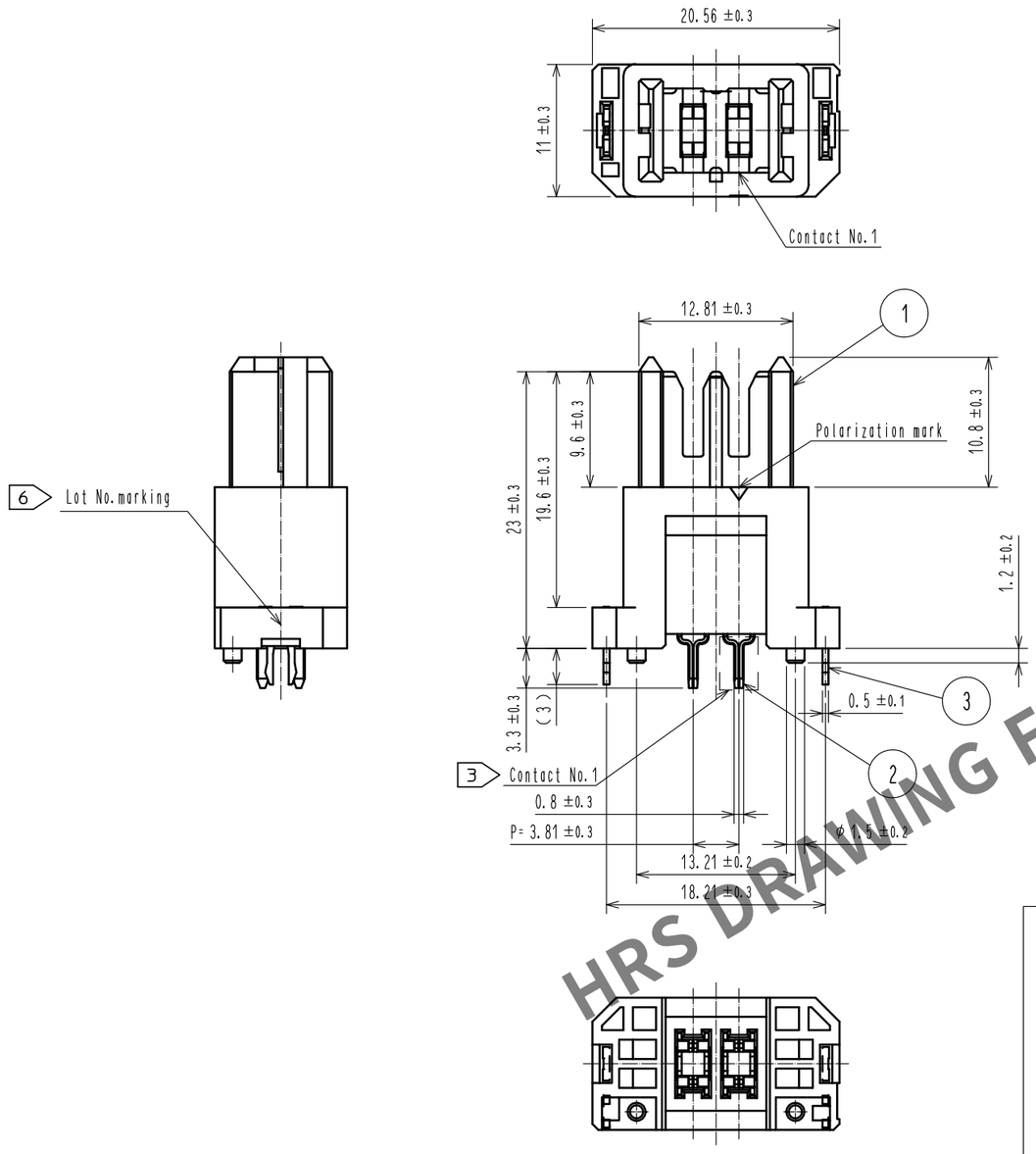

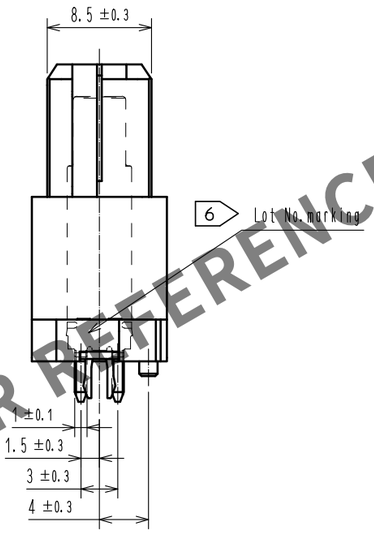

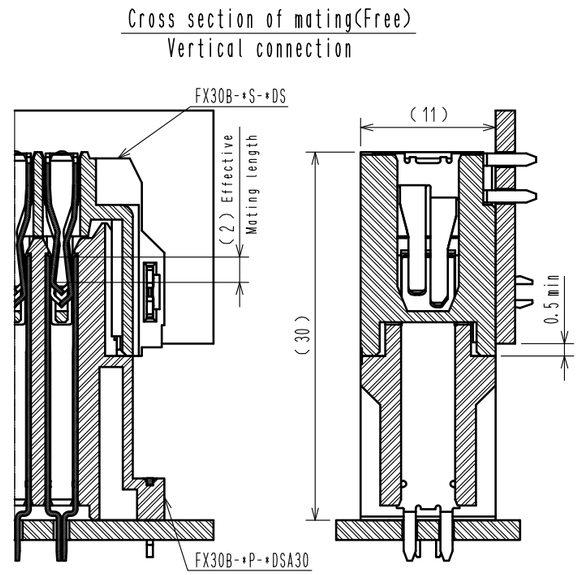

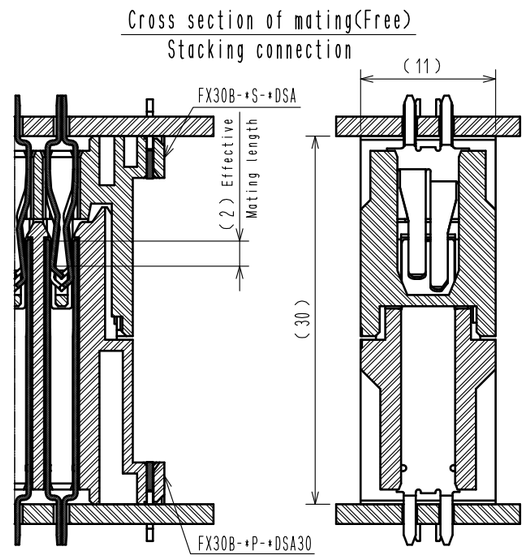

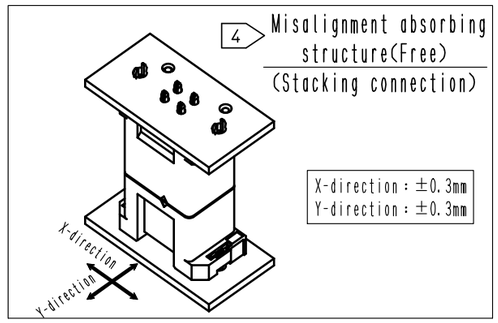

Note
1. This product is packaged in tray.(49pcs/tray)
2. Blemish and hit mark can be occured through out the manufacturing process whitch dosen't affect quality level. Also, black spot could be observed on the surface of housing.
3. For the contact No., adjacent two pairs of leads placed back-to-back (4 leads in total) compose one line.
4. Misalignment absorbing range:±0.3mm max.
5. The dimension in parentheses are for references.
6. Lot No. is indicated at either one of the position as shown.
7. (1) UL(File No.E52653)
   C-UL(File No.E52653)
   (2) TUV(Certificate No.R50275872) authorization article.

NO.	MATERIAL	FINISH , REMARKS	NO.	MATERIAL	FINISH , REMARKS
2	COPPER ALLOY	CONTACT AREA:GOLD-PLATING 0.1μm LEAD AREA:TIN-PLATING 1.0μm UNDER PLATING:NICKEL 1.0μm	4	POLYSTYRENE	
1	POLYAMIDE	BLACK UL94V-0	3	PHOSPHOR BRONZE	TIN-PLATING 3.0μm UNDER PLATING:NICKEL 1.0μm

UNITS	SCALE		COUNT	DESCRIPTION OF REVISIONS	DESIGNED	CHECKED	DATE
mm	2 : 1	(2)	1	DIS-F-00006019	AK. IWAHORI	HT. YAMAGUCHI	20200406

HIROSE ELECTRIC CO., LTD.

APPROVED	: HS. OKAWA	20130307	DRAWING NO.	EDC3-347264-00
CHECED	: KI. HIROKAWA	20130307	PART NO.	FX30B-2P-3.81DSA30
DESIGNED	: DK. AIMOTO	20130307	CODE NO.	CL570-3300-2-00
DRAWN	: DK. AIMOTO	20130307		(2) 1/2

HRS DRAWING FOR REFERENCE

Oct.1.2025 Copyright 2025 HIROSE ELECTRIC CO., LTD. All Rights Reserved.
In case of consideration for using Automotive equipment / device which demand high reliability, kindly contact our sales window correspondents.

Recommended hole pattern dimension of PCB(5:1)
(Connector mounting side, PCB thickness:t=1.6mm)

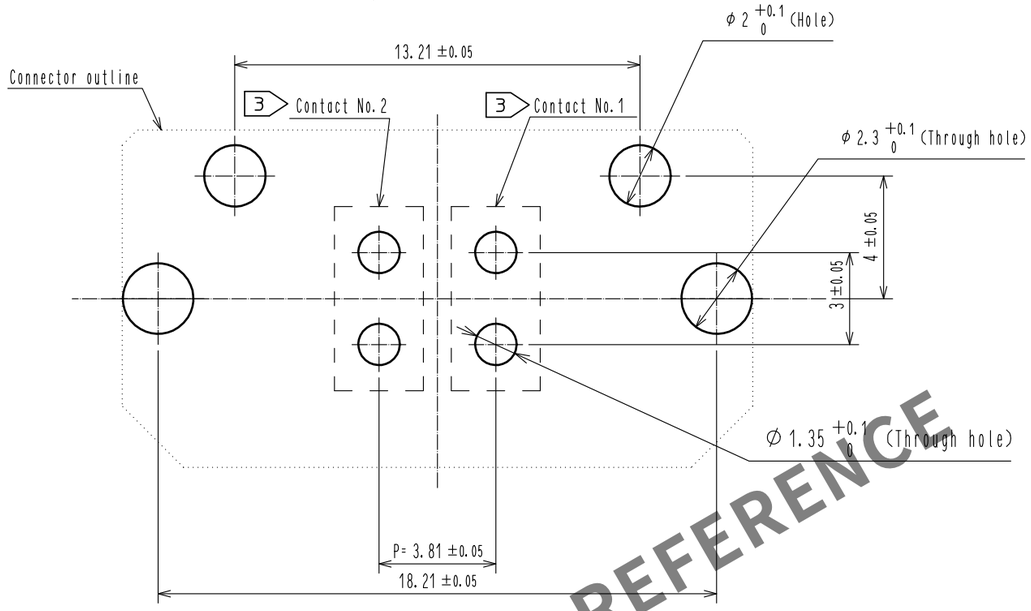

1 Drawing for packaging(1:2)

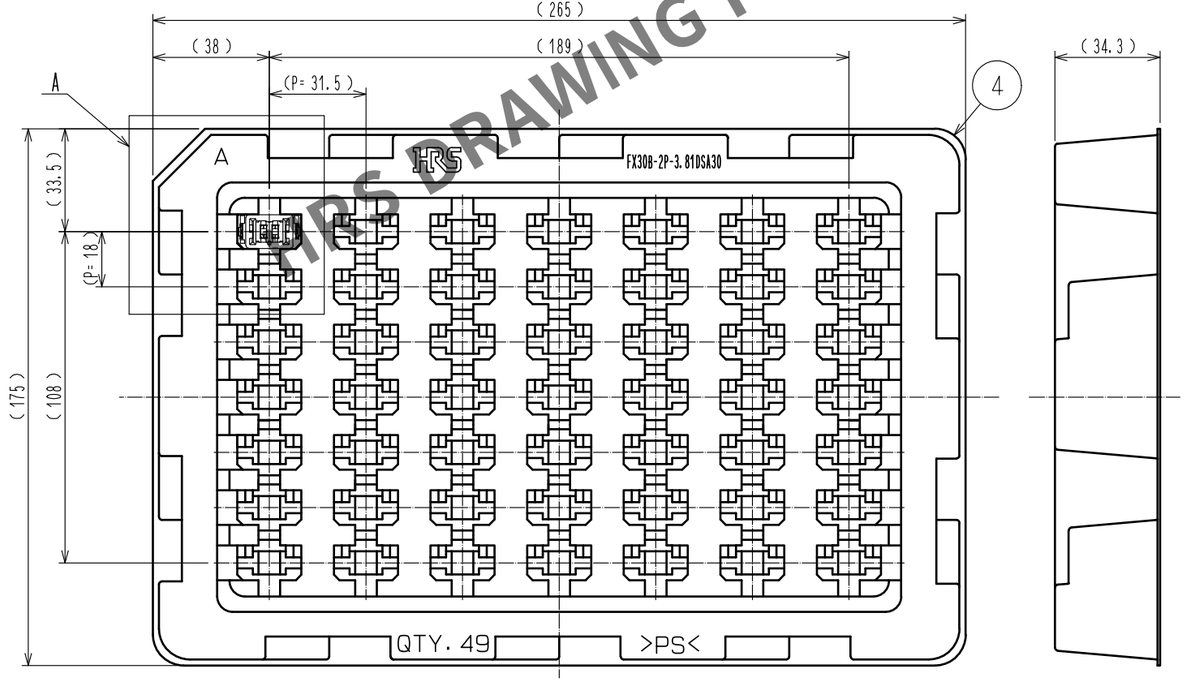

A(1:1)

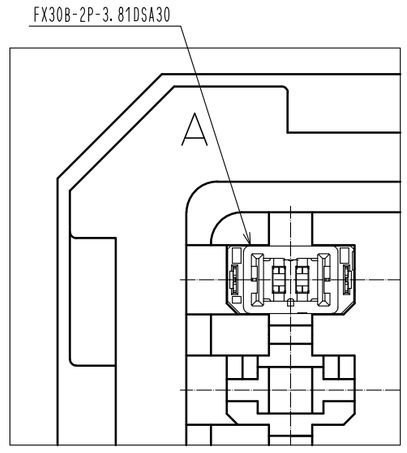

HRS DRAWING FOR REFERENCE

HRS	DRAWING NO.	EDC3-347264-00
	PART NO.	FX30B-2P-3.81DSA30
	CODE NO.	CL570-3300-2-00

2 2/2

FORM HC0011-5-8_AN