Nov.1.2025 Copyright 2025 HIROSE ELECTRIC CO., LTD. All Rights Reserved.
In case of consideration for using Automotive equipment / device which demand high reliability, kindly contact our sales window correspondents.

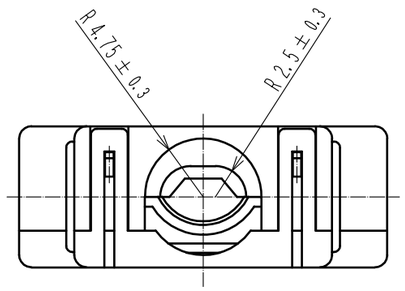

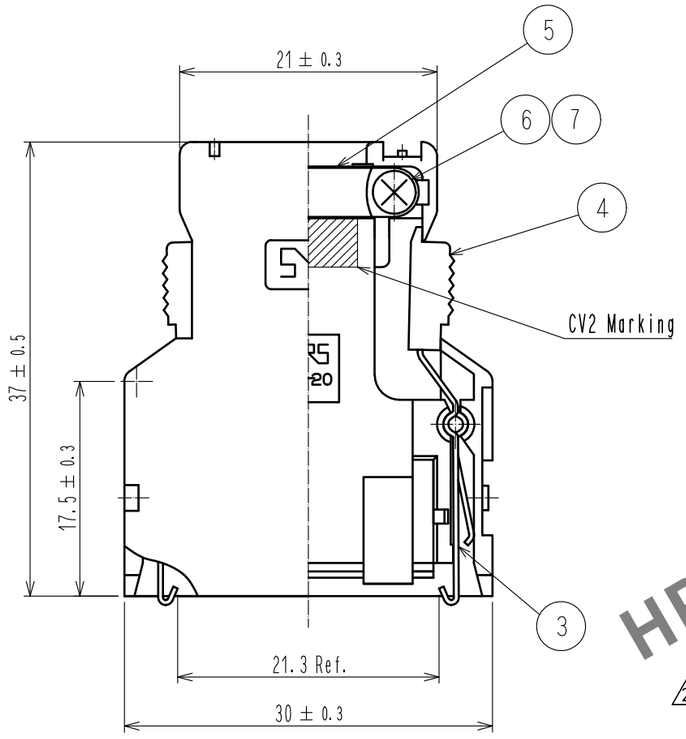

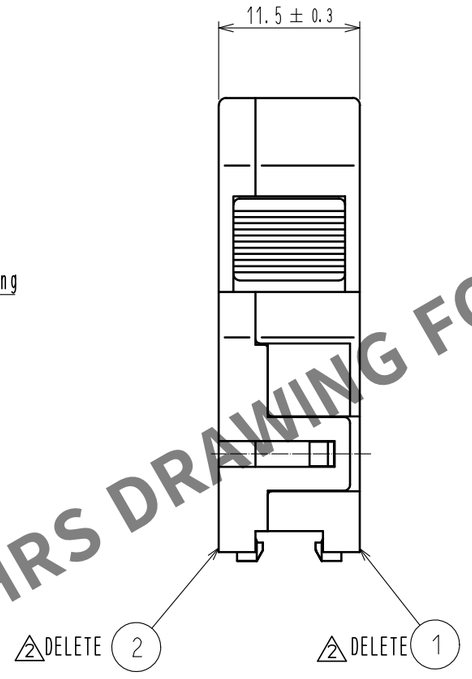

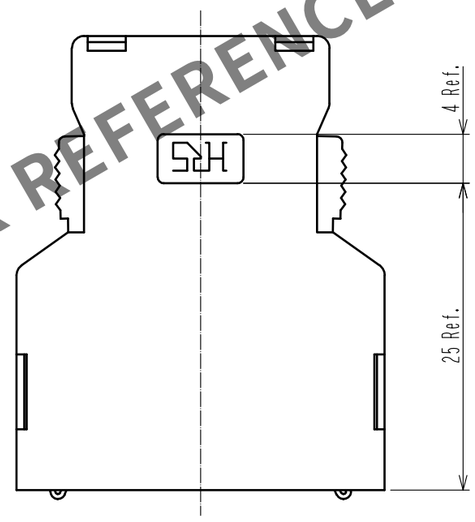

ASSEMBLED FIGURE

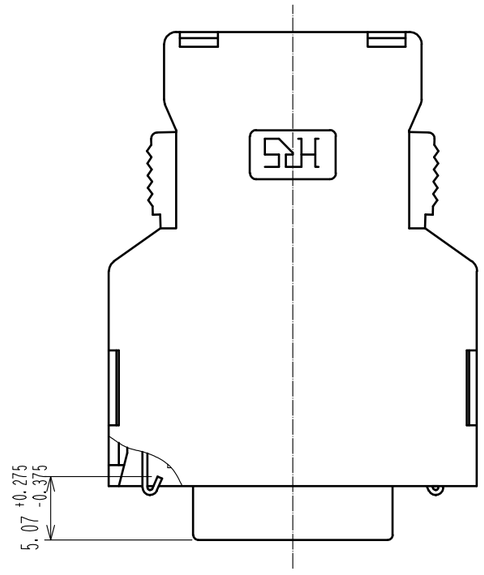

HRS DRAWING FOR REFERENCE

Note 1. Outer surface of cover case part no. ① and ② are matte finished equivalent to TH-117 (Tanazawa hakkosha Co., Ltd.). Except around the ditch of HRS mark.
2. Part no. ①, ③, ④, ⑦ are assembled together as a unit. Part no. ②, ⑤, ⑥ are not assembled when delivered.
3. Outer diameter of applicable cable shall be φ6±0.5.

NO.	MATERIAL	FINISH , REMARKS	NO.	MATERIAL	FINISH , REMARKS
4	PC	Gray、UL94V-0			
3	Stainless steel		7	Brass	Nickel plating 0.8μm min.
2	PC	Gray、UL94V-0	6	Brass	Nickel plating 0.8μm min.
1	PC	Gray、UL94V-0	5	Stainless steel	

UNITS	SCALE	COUNT	DESCRIPTION OF REVISIONS	DESIGNED	CHECKED	DATE
mm	2 : 1	2 3	DIS-E-00009711	KG. OKITA	MN. KENJO	20220502

HRS HIROSE ELECTRIC CO., LTD.

APPROVED	: HO. MIWA	05. 10. 13	DRAWING NO.	EDC-044566-50-01
CHECKED	: YH. ENAMI	05. 10. 07	PART NO.	FI-20-CV2(50)
DESIGNED	: TU. TANIGUCHI	05. 10. 03		
DRAWN	: YK. SATO	05. 09. 21	CODE NO.	CL0230-0504-2-50 2 1/1

FORM HC0011-5-7