Dec.1.2025 Copyright 2025 HIROSE ELECTRIC CO., LTD. All Rights Reserved.
In case of consideration for using Automotive equipment / device which demand high reliability, kindly contact our sales window correspondents.

	COUNT	DESCRIPTION OF REVISIONS	BY	CHKD	DATE		COUNT	DESCRIPTION OF REVISIONS	BY	CHKD	DATE
△					. .	△					. .
△					. .	△					. .
△					. .	△					. .

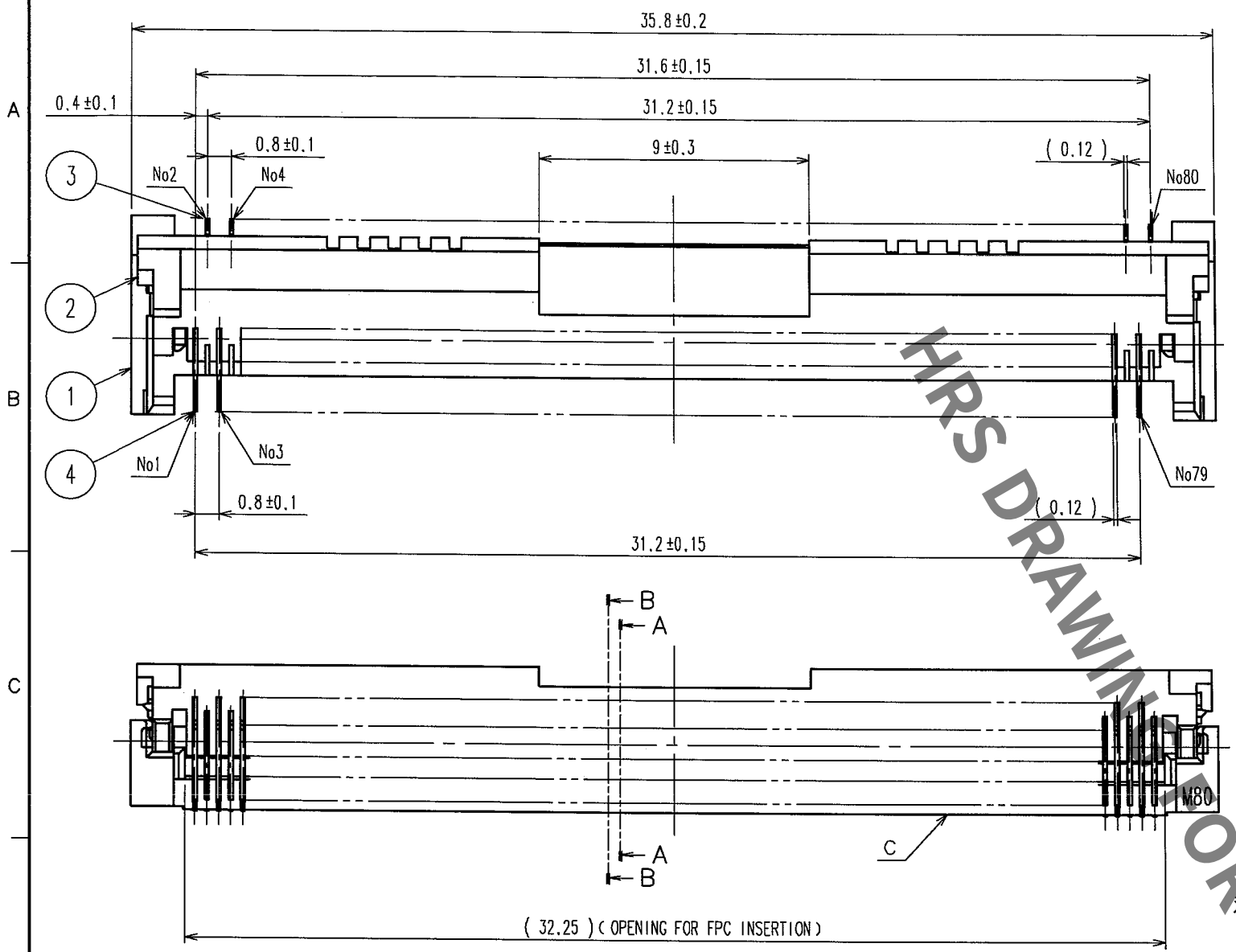

RECOMMENDED FPC(FREE)

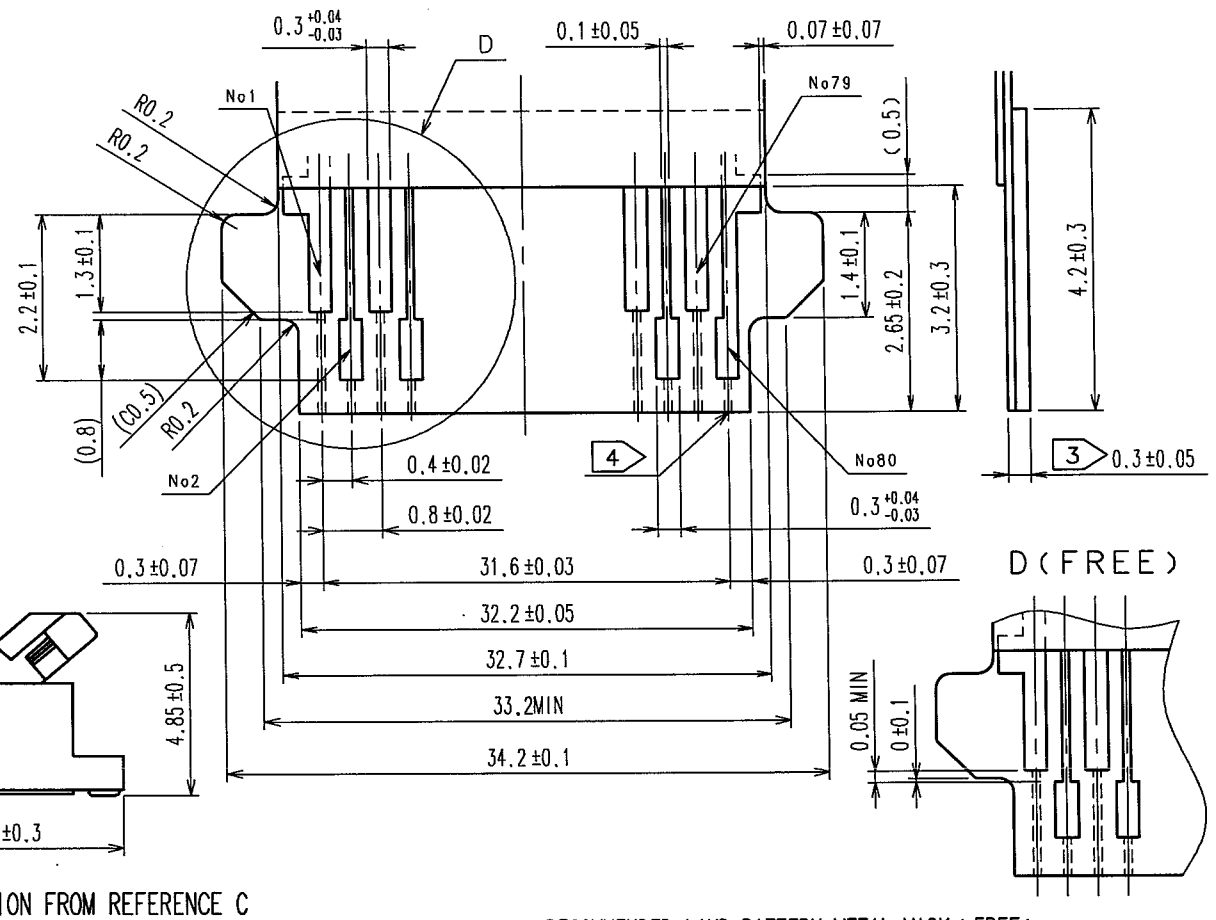

注
1. DIMENSION FROM REFERENCE C
2. LEAD CO-PLANARITY SHALL BE 0.1MAX.
3. STIFFNER MATERIAL:POLYIMIDE, HEAT CURED ADHESIVE. POLYIMIDE THICKNESS OF STIFFNER SINGLE-SIDED FPC: 0.15mm(6mil)MIN DOUBLE-SIDED FPC: 0.125mm(5mil)MIN
4. CONDUCTOR WIDTH SHALL BE 0.1±0.05 IF FPC HAS PLATING BARS.
5. CROSS SECTION A-A IS FOR EVEN-NUMBER PINS,AND CROSS SECTION B-B IS FOR ODD-NUMBER PINS.
6. THE QUALITY REMAINS GOOD, EVEN WITH THE DARK SPOTS, WHICH COULD OCCASIONALLY OCCUR ON MOLDED PLASTIC.

RECOMMENDED LAND PATTERN,METAL MASK(FREE)

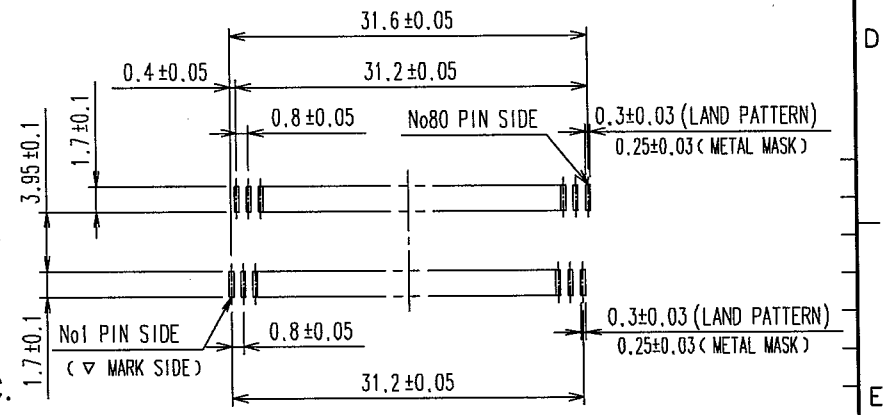

※RECOMMENDED METAL MASK THICKNESS: t=0.15

5 B-B(10:1)

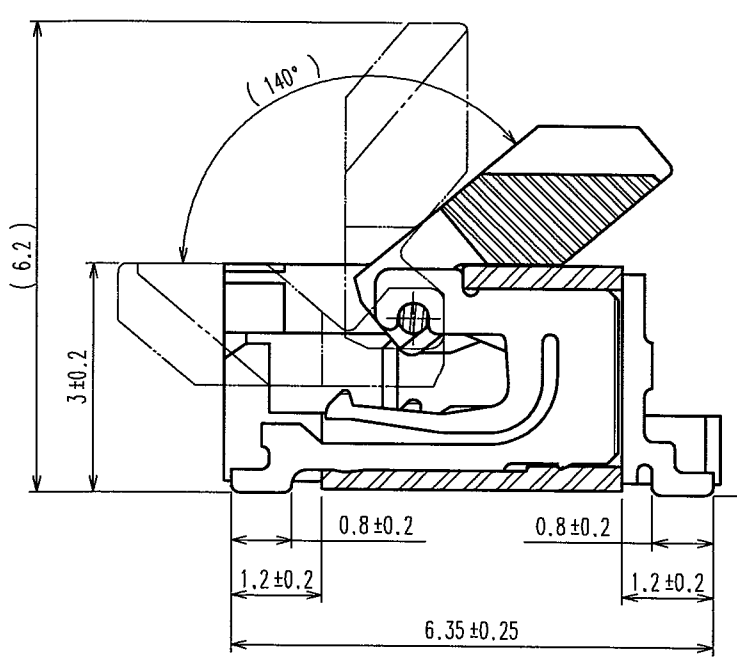

5 A-A(10:1)

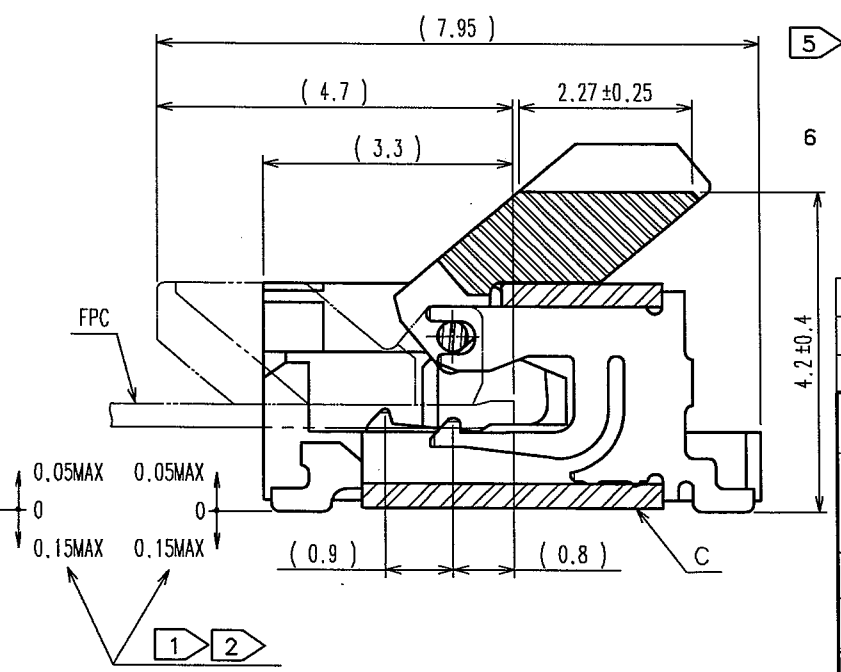

NO.	MATERIAL	FINISH, REMARKS	NO.	MATERIAL	FINISH, REMARKS
2	LCP	(BLACK) UL94V-0	4	PHOSPHOR BRONZE	GOLD FLASH OVER NICKEL 1μm MIN
1	LCP	(BEIGE) UL94V-0	3	PHOSPHOR BRONZE	GOLD FLASH OVER NICKEL 1μm MIN

CODE NO.(OLD)	DRAWN	DESIGNED	CHECKED	APPROVED	RELEASED
CL?	Y. Ebi 04.10.15	J. Murai '04.10.19	T. Kuwata '04.10.19	R. Takayama 04.10.19	. .

SCALE 5 : 1	DRAWING NO. EDC3-155101-01	PART NO. FH30M-80S-0.4SHW(05)
UNITS mm	HRS HIROSE ELECTRIC CO., LTD	CODE NO. CL580-0102-0-05 1/2

TO
NC
IDN

FORM NO.229 (FH)

HRS DRAWING FOR REFERENCE

Dec.1.2025 Copyright 2025 HIROSE ELECTRIC CO., LTD. All Rights Reserved.
In case of consideration for using Automotive equipment / device which demand high reliability, kindly contact our sales window correspondents.

	COUNT	DESCRIPTION OF REVISIONS	BY	CHKD	DATE		COUNT	DESCRIPTION OF REVISIONS	BY	CHKD	DATE
△					. .	△					. .
△					. .	△					. .
△					. .	△					. .

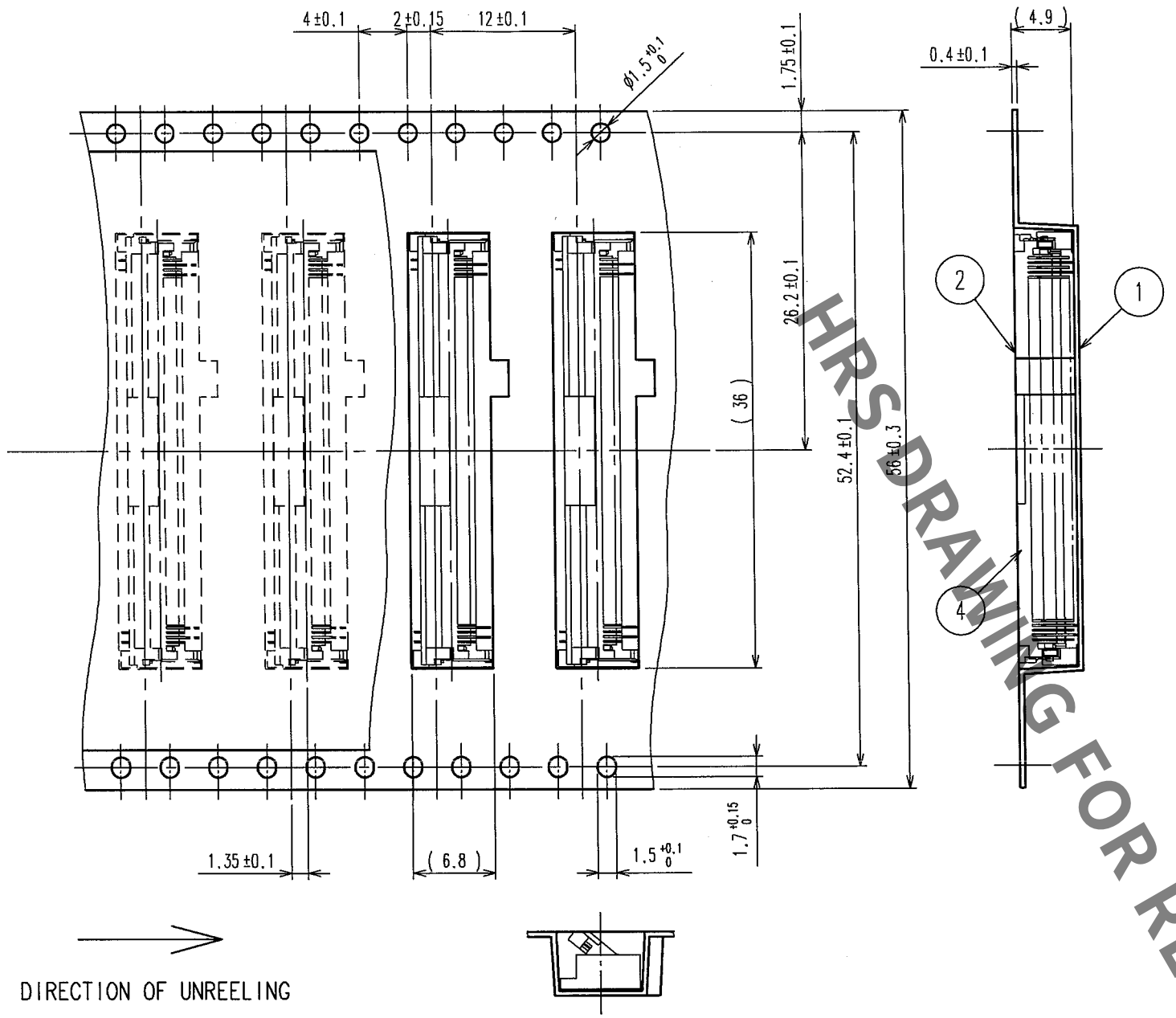

REEL DIMENSION(FREE)

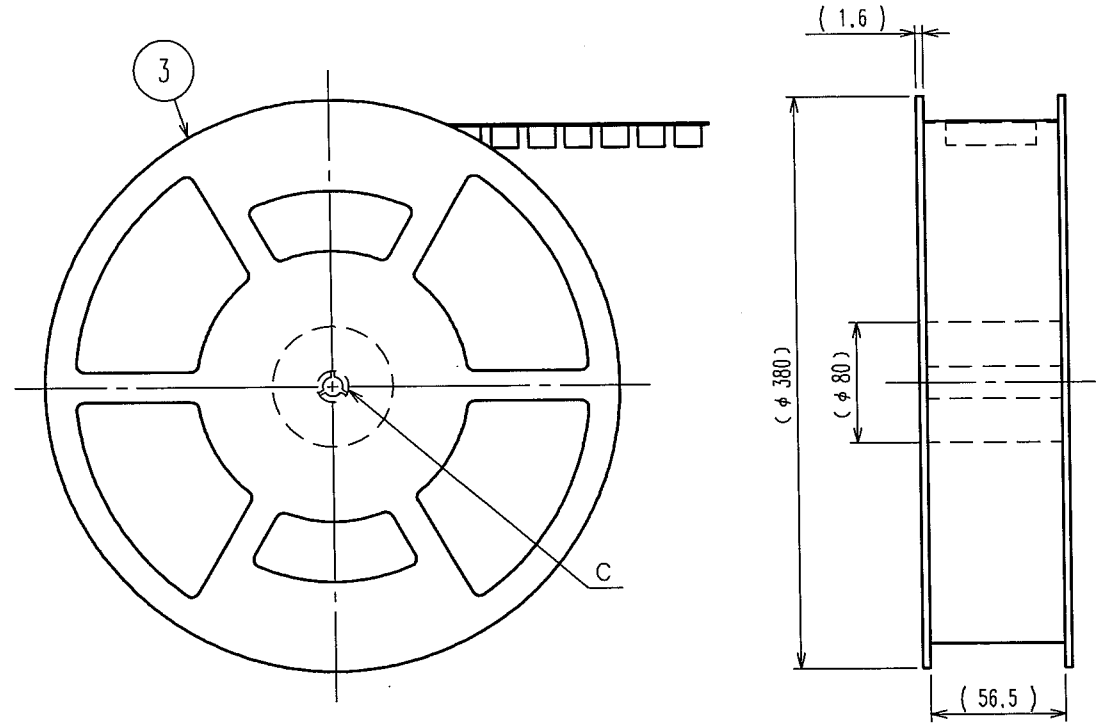

C(1:1)

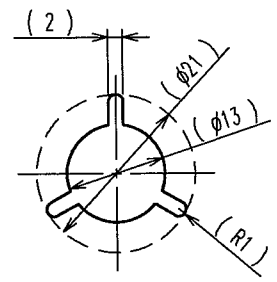

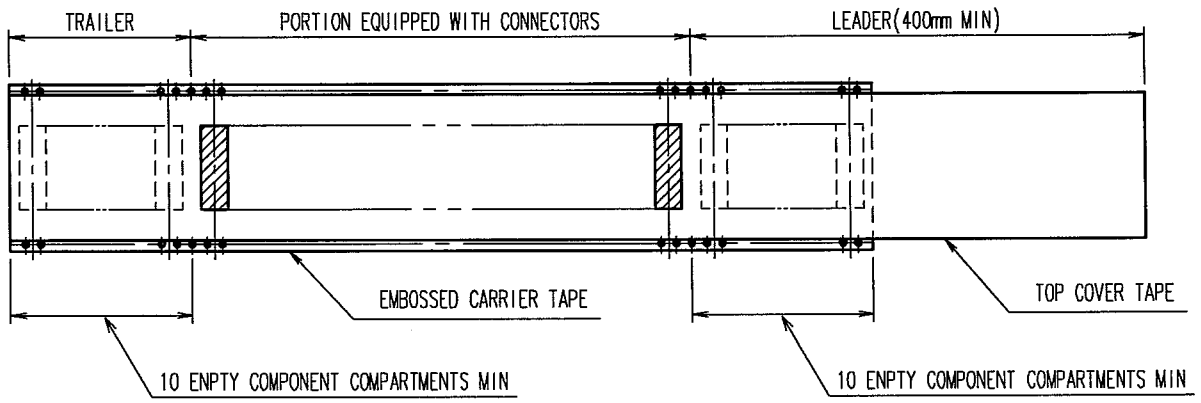

注 1 PER REEL : 1000 CONNECTORS.
2 REFER TO JIS C 0806 (PACKAGING OF COMPONENTS FOR AUTOMATIC HANDLING.)

HRS DRAWING FOR REFERENCE

NO.	MATERIAL	FINISH, REMARKS	NO.	MATERIAL	FINISH, REMARKS
2	POLYESTER		4	(CONNECTOR)	
1	POLYSTYRENE		3	POLYSTYRENE	

CODE NO.(OLD)	DRAWN	DESIGNED	CHECKED	APPROVED	RELEASED
CL	Y. Ebi	Y. Murai	T. Kuwata	R. Takayama	. .
PACKAGING SPECIFICATION	04.10.15	'04.10.19	'04.10.19	04.10.19	

SCALE 2 : 1	DRAWING NO. EDC3-155101-01	PART NO. FH30M-80S-0.4SHW(05)
UNITS mm	HRS HIROSE ELECTRIC CO., LTD	CODE NO. CL580-0102-0-05 2/2

TO
NC
IDN

FORM NO.229