Apr.1.2025 Copyright 2025 HIROSE ELECTRIC CO., LTD. All Rights Reserved.
In case of consideration for using Automotive equipment / device which demand high reliability, kindly contact our sales window correspondents.

	COUNT	DESCRIPTION OF REVISIONS	BY	CHKD	DATE		COUNT	DESCRIPTION OF REVISIONS	BY	CHKD	DATE
△					. .	△					. .
△					. .	△					. .
△					. .	△					. .

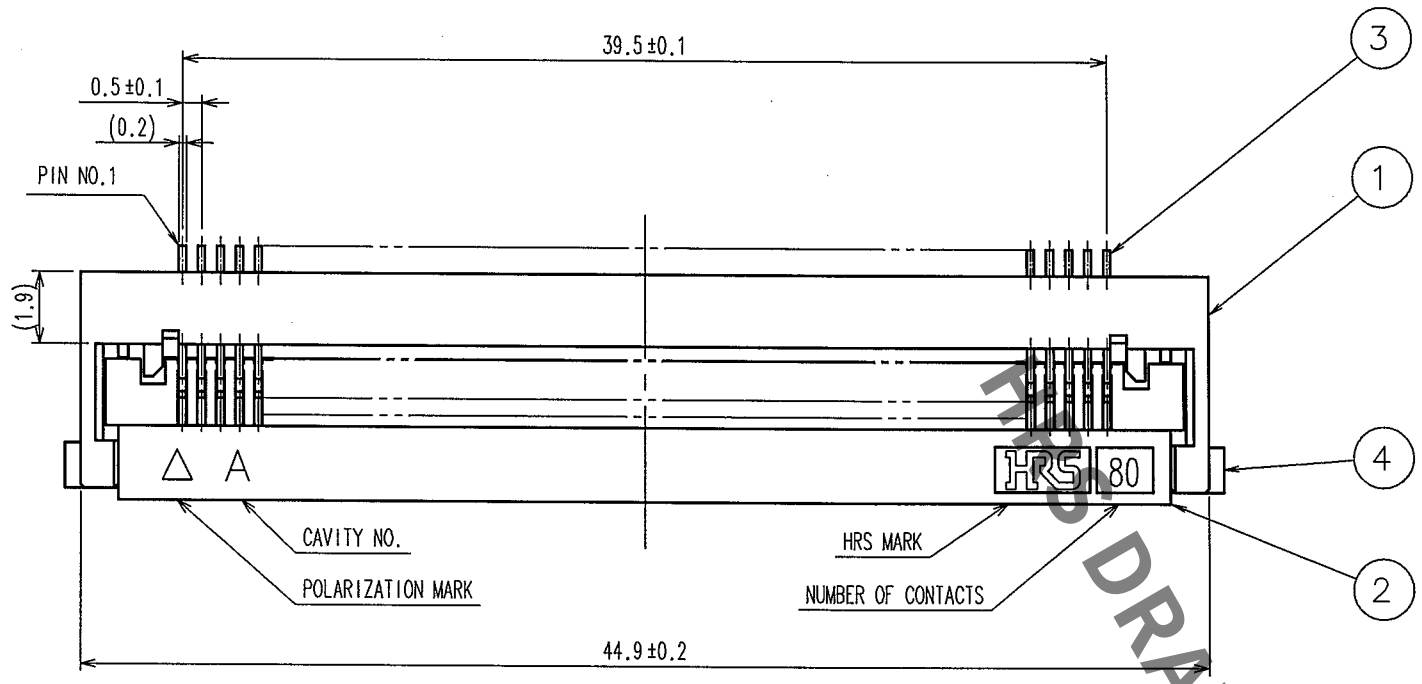

RECOMMENDED FPC (FREE)

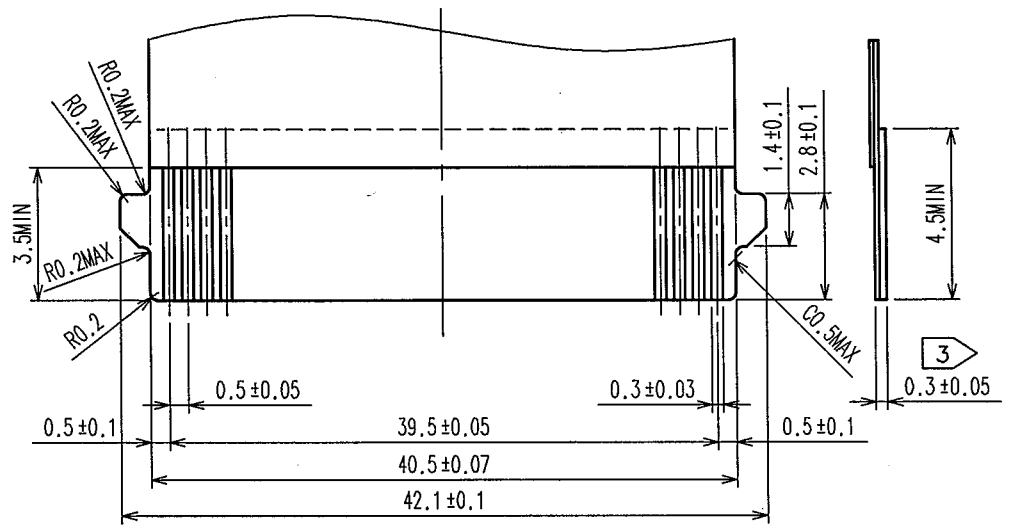

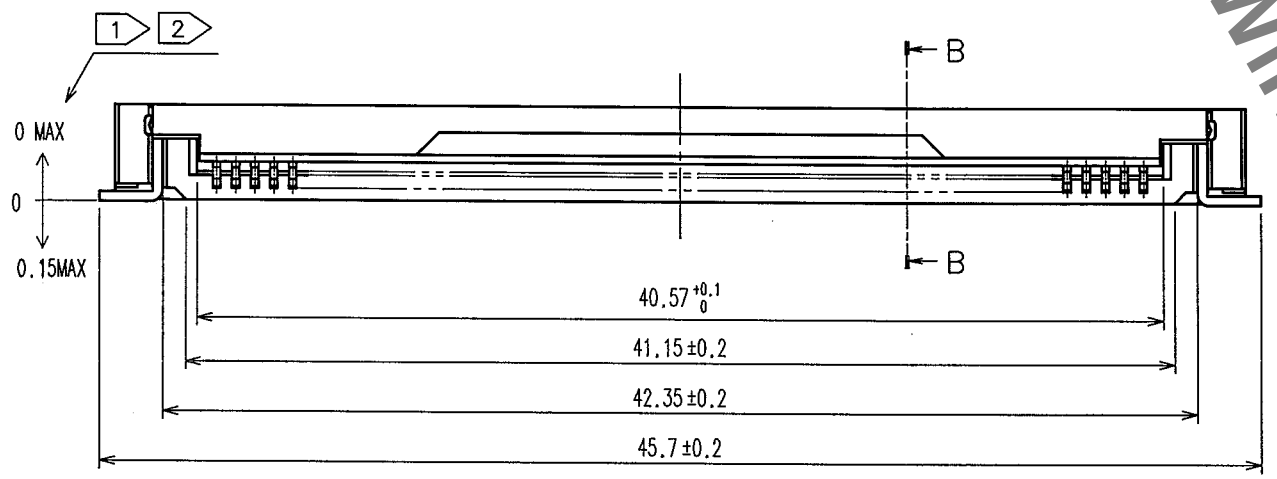

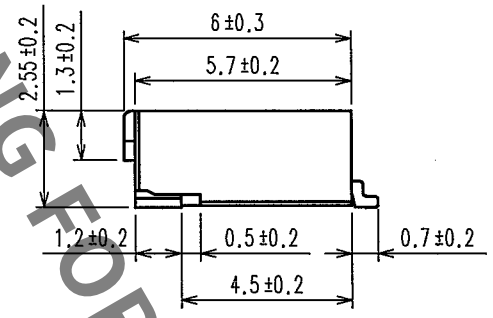

RECOMMENDED LAND PATTERN , METAL MASK(FREE)

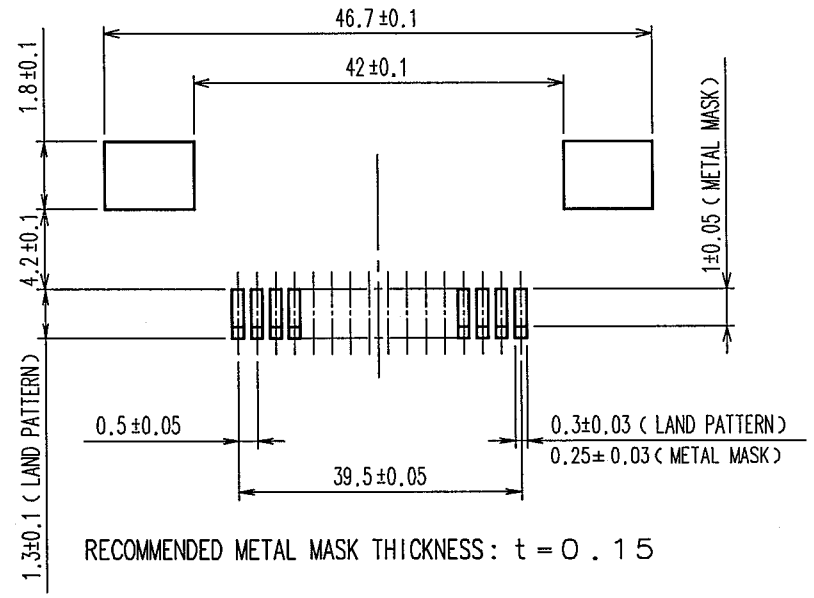

B-B (10 : 1)

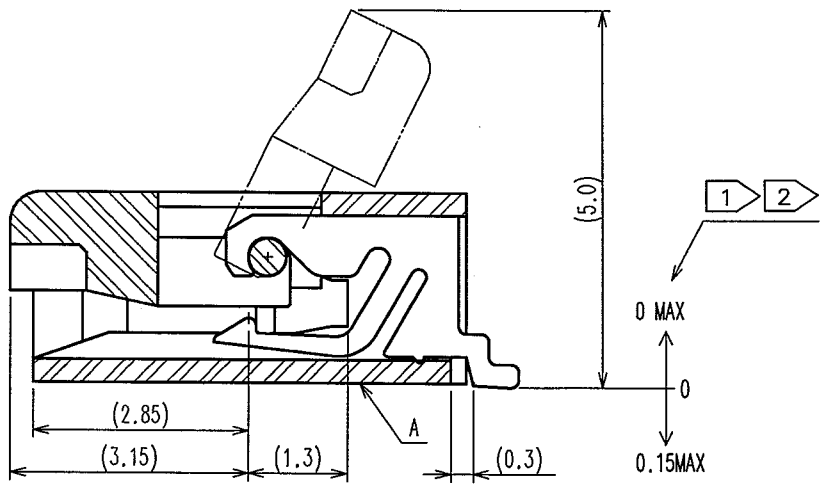

NOTE
1. REFERENCE IS A.
2. LEAD CO-PLANARITY SHALL BE 0.1 MAX.
3. THICKNESS OF SUPPORTING TAPE SHALL BE 0.188(7.5mil) MIN.

NO.	MATERIAL	FINISH, REMARKS	NO.	MATERIAL	FINISH, REMARKS
2	LCP	(BLACK) UL94V-0	4	BRASS	TIN PLATING 1μm MIN. OVER NICKEL 1μm MIN.
1	LCP	(GRAY) UL94V-0	3	PHOSPHOR BRONZE	GOLD PLATING FLASH OVER NICKEL 1μm MIN.

CODE NO.(OLD)	DRAWN	DESIGNED	CHECKED	APPROVED	RELEASED
CL	D.YAMADA 04.06.08	H.TSUKUMO 04.06.08	04.06.08	04.06.08	. .

SCALE 5 : 1	DRAWING NO. EDC3-154339-01	PART NO. FH28H-80S-0.5SH(05)
UNITS mm	HRS HIROSE ELECTRIC CO., LTD	CODE NO. CL586-1805-3-05 1/2

TO
NC

FOR REFERENCE

Apr.1.2025 Copyright 2025 HIROSE ELECTRIC CO., LTD. All Rights Reserved.
In case of consideration for using Automotive equipment / device which demand high reliability, kindly contact our sales window correspondents.

	COUNT	DESCRIPTION OF REVISIONS	BY	CHKD	DATE		COUNT	DESCRIPTION OF REVISIONS	BY	CHKD	DATE
△					. .	△					. .
△					. .	△					. .
△					. .	△					. .

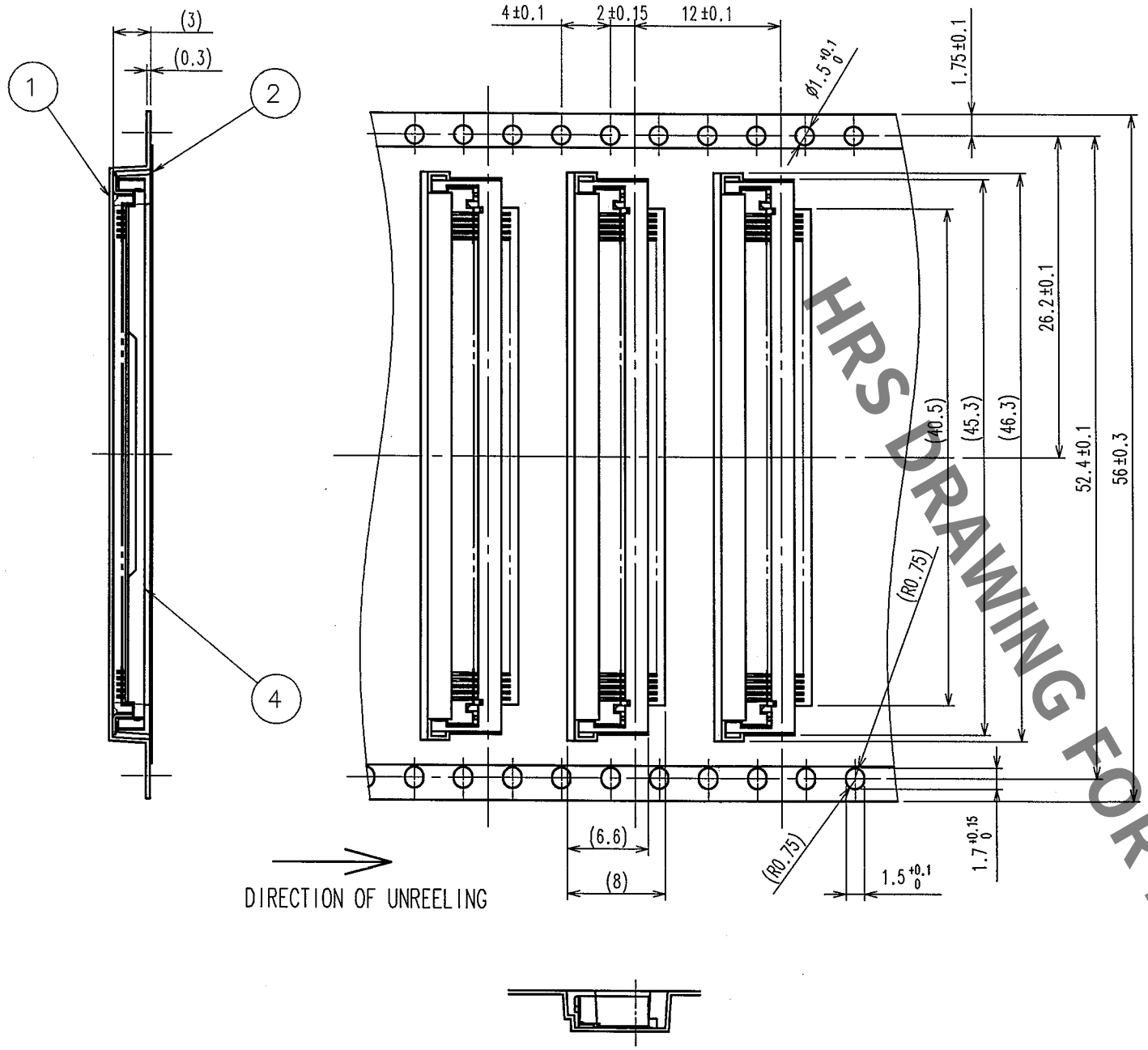

REEL DIMENSION (FREE)

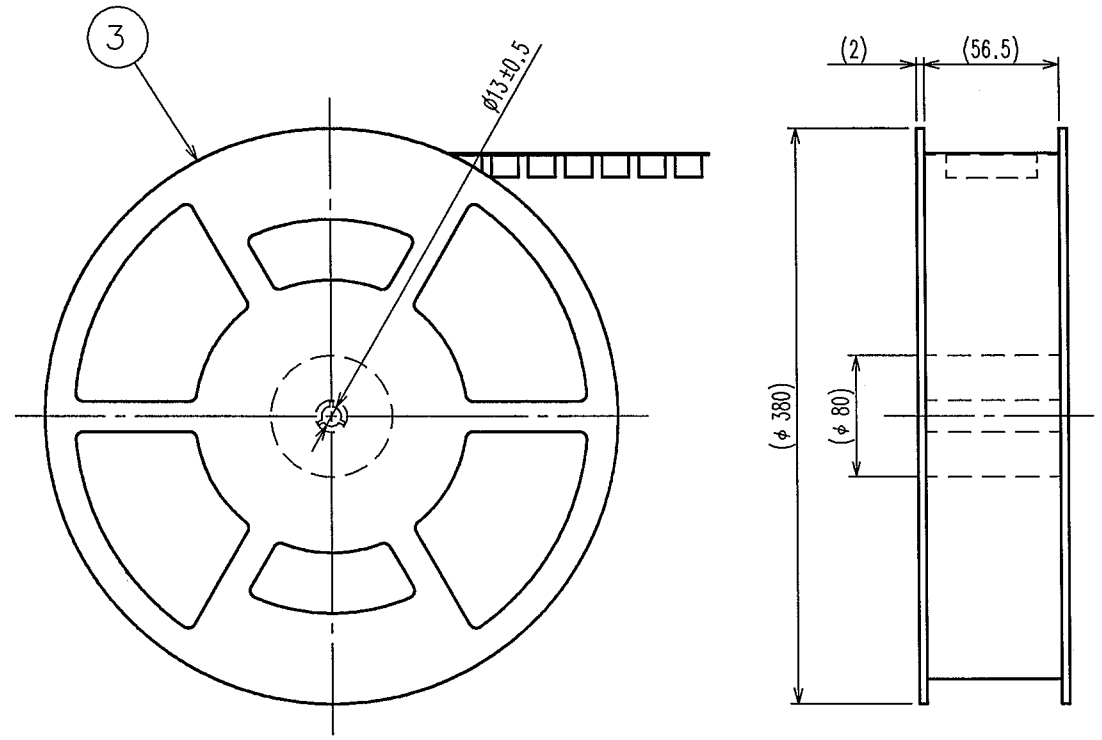

HRS DRAWING FOR REFERENCE

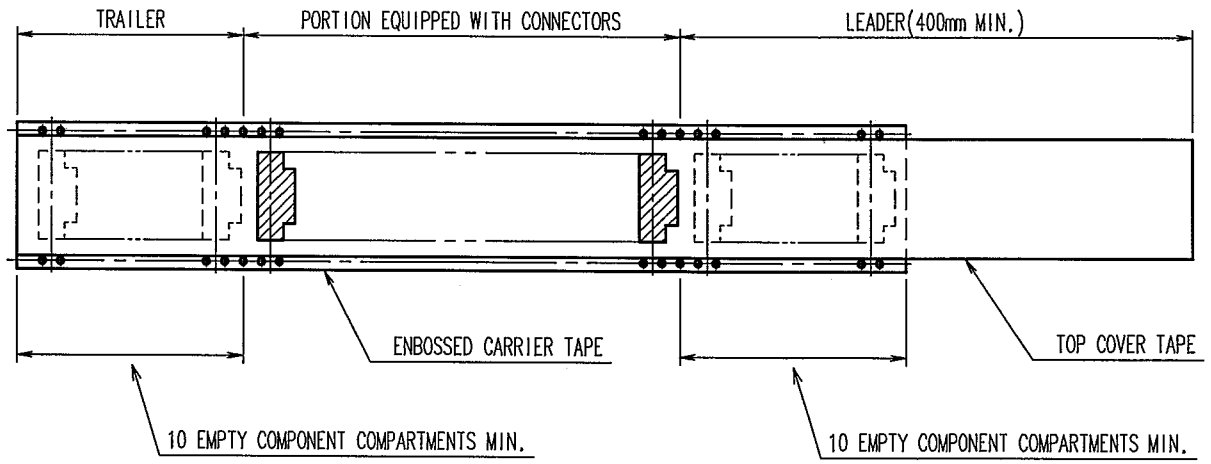

NOTE 1 THE DIMENSIONS IN PARENTHESES ARE FOR REFERENCE.
2 PER REEL : 2000 CONNECTORS.
3 REFER TO JIS C 0806 (PACKAGING OF COMPONENTS FOR AUTOMATIC HANDLING).

NO.	MATERIAL	FINISH, REMARKS	NO.	MATERIAL	FINISH, REMARKS
2	POLYESTER		4	(CONNECTOR)	
1	POLYSTYRENE		3	POLYSTYRENE	

CODE NO.(OLD) CL	DRAWN	DESIGNED	CHECKED	APPROVED	RELEASED
DRAWING FOR PACKING	D.YAMADA 04-06-08	H.TSUKUMO 04-06-08	S.Watanabe 04-06-08	R.Takayama 04-06-08	. .

SCALE 2 : 1	DRAWING NO. EDC3-154339-01	PART NO. FH28H-80S-0.5SH(05)
UNITS mm	HRS HIROSE ELECTRIC CO., LTD	CODE NO. CL586-1805-3-05 2/

TO
NC

FORM NO.229