Sep.1.2025 Copyright 2025 HIROSE ELECTRIC CO., LTD. All Rights Reserved.
In case of consideration for using Automotive equipment / device which demand high reliability, kindly contact our sales window correspondents.

	COUNT	DESCRIPTION OF REVISIONS	BY	CHKD	DATE		COUNT	DESCRIPTION OF REVISIONS	BY	CHKD	DATE
△					. .	△					. .
△					. .	△					. .
△					. .	△					. .

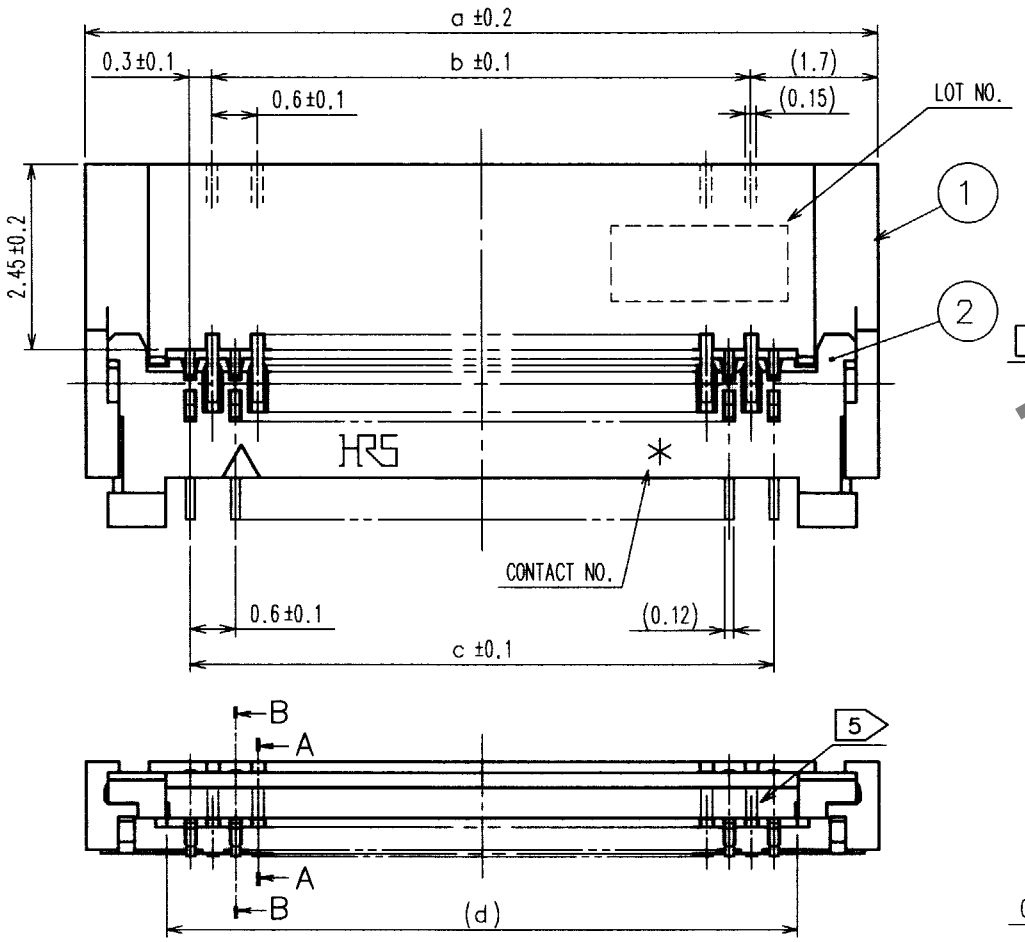

A－A（20：1）

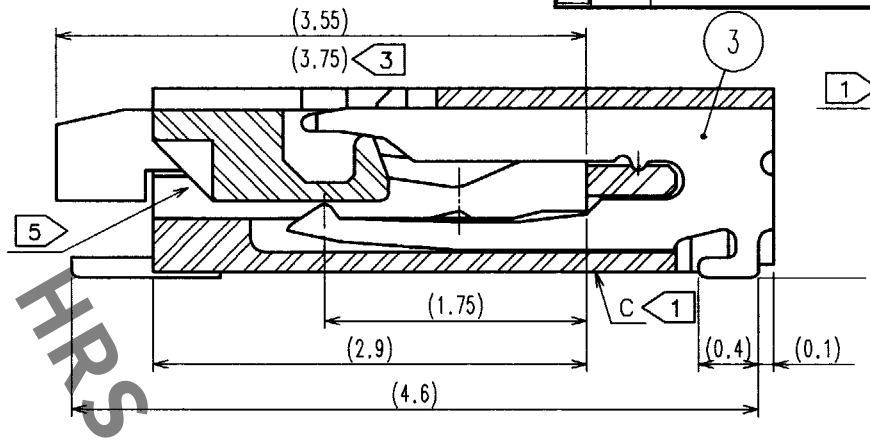

B－B（20：1）

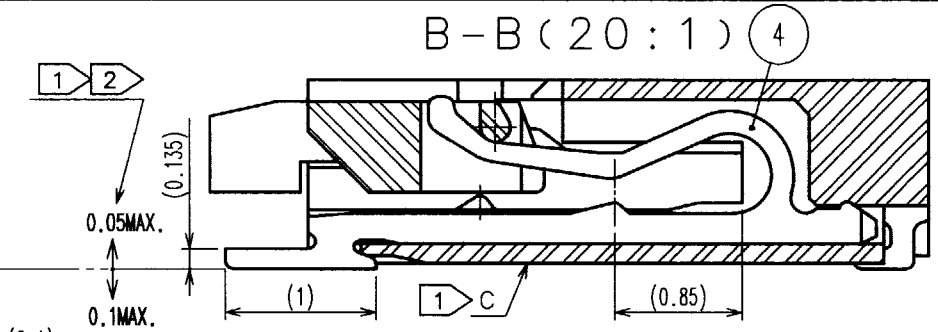

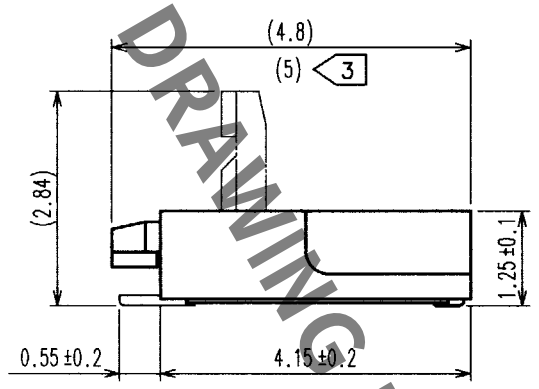

RECOMMENDED LAND PATTERN, METAL MASK(FREE)

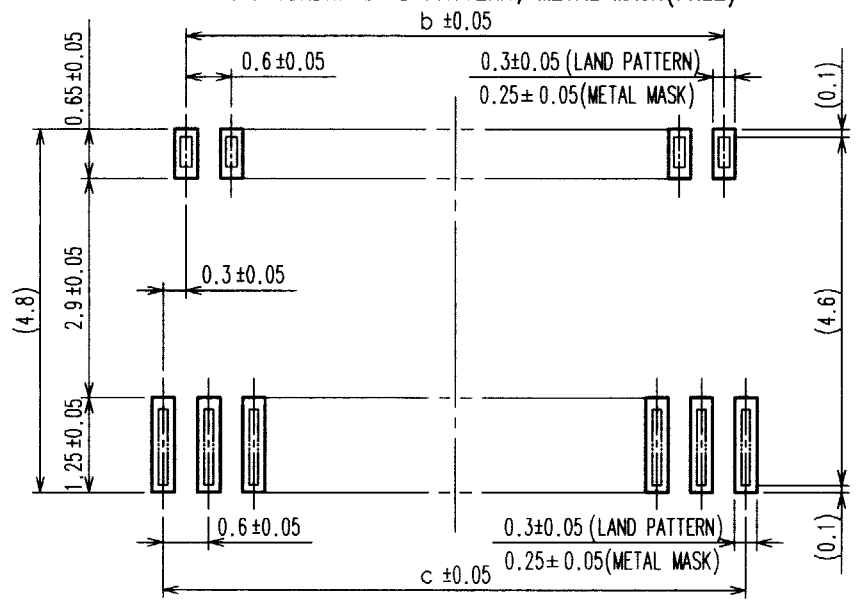

RECOMMENDED METAL MASK THICKNESS : t=0.10

注 1 DIMENSIONS FROM REFERENCE SURFACE C (BOTTOM SURFACE OF HOUSING).
2 LEAD CO-PLANARITY SHALL BE 0.1 MAX.
3 LENGTH AFTER FPC IS INSERTED.
4 $0.3^{+0.04}_{-0.03}$ CAN BE APPLIED WITH LEAD PLATED.
5 PREVENTIVE HOLES FOR SINK MARK ARE APPLIED TO POSITIONS OF 33 OR LARGER.
6 NOTE THAT PREVENTIVE HOLE FOR SINK MARK COULD BE ADDED FOR IMPROVEMENT.
THE QUALITY REMAINS GOOD, EVEN WITH THE DARK SPOTS, WHICH COULD OCCASIONALLY OCCUR ON MOLDED PLASTIC.

RECOMMENDED FPC(FREE)

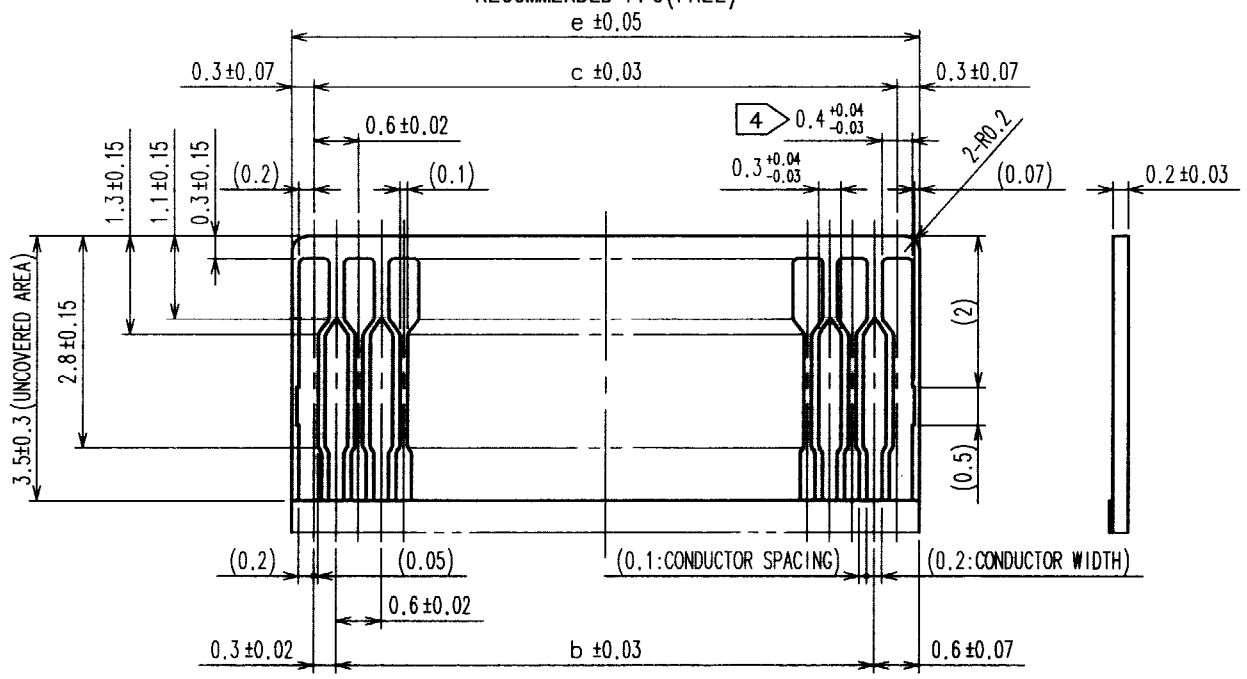

RECOMMENDED STIFFENER MATERIAL:POLYIMIDE, HEAT CURED ADHESIVE.

DIMENTION MATRIX

PART NO.	CODE NO.	NO. OF CONTACT	a	b	c	d	e
FH23-15S-0.3SHAW(05)	CL586-1316-7-05	15	7	3.6	4.2	4.83	4.8
FH23-17S-0.3SHAW(05)	CL586-1301-0-05	17	7.6	4.2	4.8	5.43	5.4
FH23-21S-0.3SHAW(05)	CL586-1315-4-05	21	8.8	5.4	6	6.63	6.6
FH23-25S-0.3SHAW(05)	CL586-1323-2-05	25	10	6.6	7.2	7.83	7.8
FH23-27S-0.3SHAW(05)	CL586-1309-1-05	27	10.6	7.2	7.8	8.43	8.4
FH23-31S-0.3SHAW(05)	CL586-1303-5-05	31	11.8	8.4	9	9.63	9.6
FH23-33S-0.3SHAW(05)	CL586-1305-0-05	33	12.4	9	9.6	10.23	10.2
FH23-39S-0.3SHAW(05)	CL586-1307-6-05	39	14.2	10.8	11.4	12.03	12
FH23-45S-0.3SHAW(05)	CL586-1319-5-05	45	16	12.6	13.2	13.83	13.8
FH23-51S-0.3SHAW(05)	CL586-1313-9-05	51	17.8	14.4	15	15.63	15.6
FH23-61S-0.3SHAW(05)	CL586-1311-3-05	61	20.8	17.4	18	18.63	18.6
FH23-71S-0.3SHAW(05)	CL586-1321-7-05	71	23.8	20.4	21	21.63	21.6

NO.	MATERIAL	FINISH, REMARKS	NO.	MATERIAL	FINISH, REMARKS
3	PHOSPHOR BRONZE	GOLD FLASH OVER NICKEL 1μm MIN.			
2	LCP	BLACK UL94V-0			
1	LCP	BEIGE UL94V-0	4	PHOSPHOR BRONZE	GOLD FLASH OVER NICKEL 1μm MIN.

CODE NO.(OLD)	DRAWN	DESIGNED	CHECKED	APPROVED	RELEASED
	S.OKAMURA 02.11.11	S.OKAMURA 02.11.11	R.Takeyama '02.11.11	02.11.12	. .

SCALE 10 : 1	DRAWING NO. EDC3-153685-01	PART NO. FH23-*S-0.3SHAW(05)
UNITS mm	HRS HIROSE ELECTRIC CO., LTD	CODE NO. CL586- 1/2

TO
NC

HRS DRAWING FOR REFERENCE ONLY

Sep.1.2025 Copyright 2025 HIROSE ELECTRIC CO., LTD. All Rights Reserved.
In case of consideration for using Automotive equipment / device which demand high reliability, kindly contact our sales window correspondents.

COUNT	DESCRIPTION OF REVISIONS	BY	CHKD	DATE	COUNT	DESCRIPTION OF REVISIONS	BY	CHKD	DATE
△				. .	△				. .
△				. .	△				. .
△				. .	△				. .

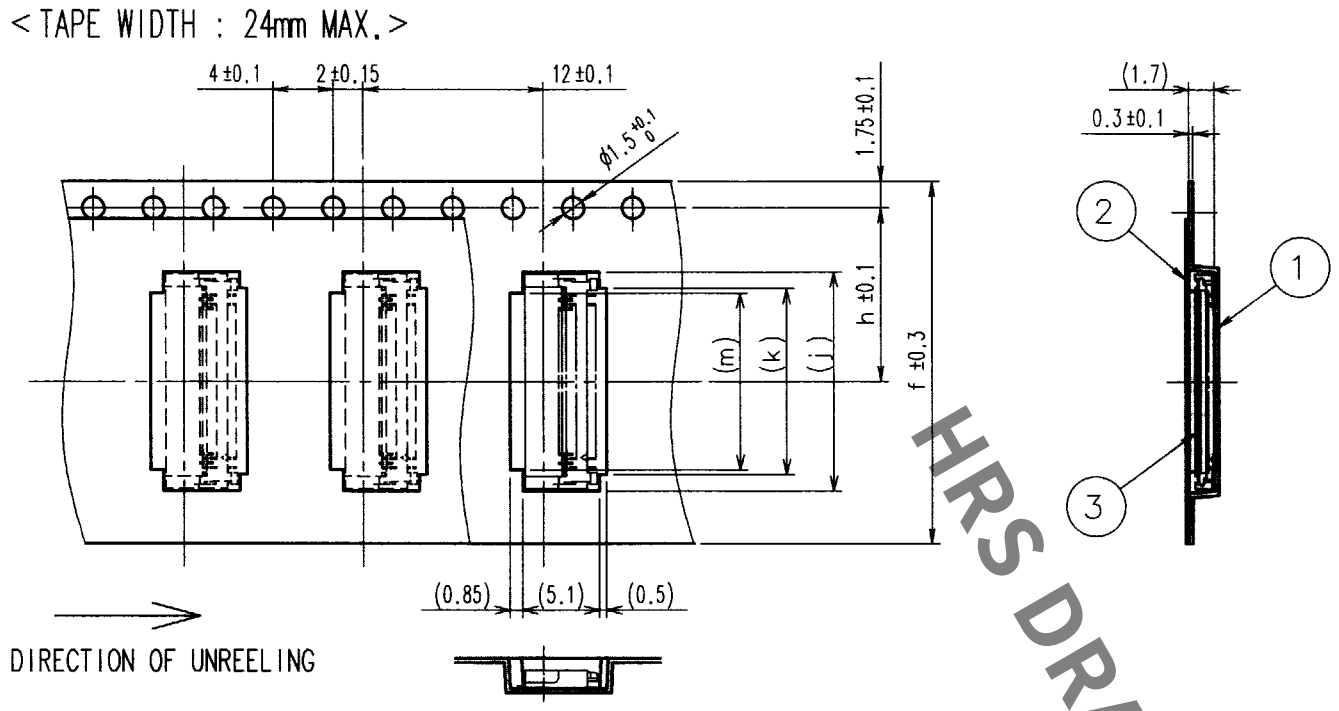

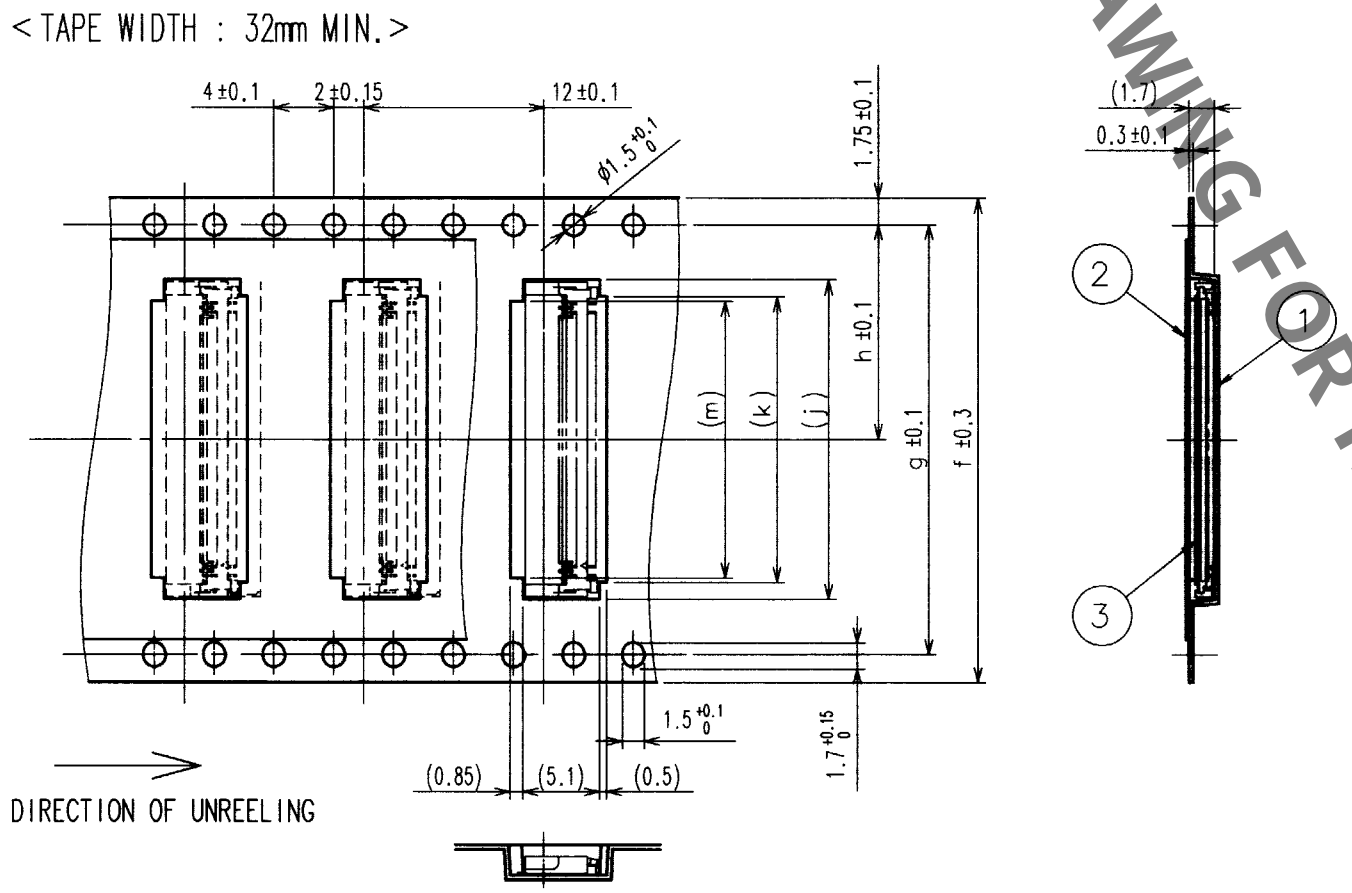

HRS DRAWING FOR REFERENCE

REEL DIMENTION (FREE)

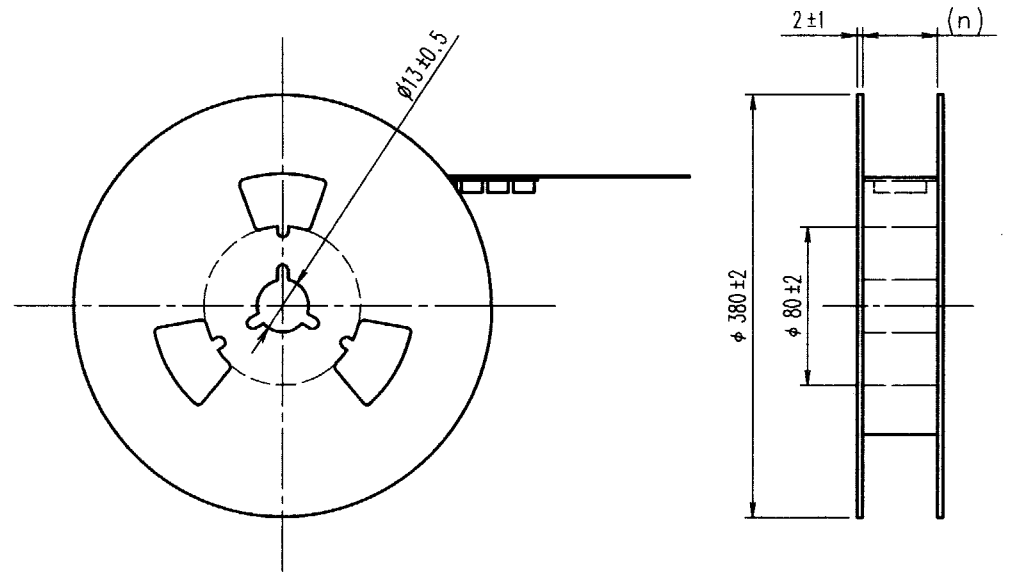

NOTES 1 THE DIMENSIONS IN PARENTHSES ARE FOR REFERENCE.
2 PER REEL : 2500 CONNECTORS.

DIMENTION MATRIX

PRT NO.	CODE NO.	PARTO OF CONTACT	f	g	h	j	k	m	n
FH23-15S-0.3SHAW(05)	CL586-1316-7-05	15	16		7.5	7.3	5.1	4.5	16.5
FH23-17S-0.3SHAW(05)	CL586-1301-0-05	17	16		7.5	7.9	5.7	5.1	16.5
FH23-21S-0.3SHAW(05)	CL586-1315-4-05	21	16		7.5	9.1	6.9	6.3	16.5
FH23-25S-0.3SHAW(05)	CL586-1323-2-05	25	24		11.5	10.3	8.1	7.5	24.5
FH23-27S-0.3SHAW(05)	CL586-1309-1-05	27	24		11.5	10.9	8.7	8.1	24.5
FH23-31S-0.3SHAW(05)	CL586-1303-5-05	31	24		11.5	12.1	9.9	9.3	24.5
FH23-33S-0.3SHAW(05)	CL586-1305-0-05	33	24		11.5	12.7	10.5	9.9	24.5
FH23-39S-0.3SHAW(05)	CL586-1307-6-05	39	24		11.5	14.5	12.3	11.7	24.5
FH23-45S-0.3SHAW(05)	CL586-1319-5-05	45	24		11.5	16.3	14.1	13.5	24.5
FH23-51S-0.3SHAW(05)	CL586-1313-9-05	51	24		11.5	18.1	15.9	15.3	24.5
FH23-61S-0.3SHAW(05)	CL586-1311-3-05	61	32	28.4	14.2	21.1	18.9	18.3	32.5
FH23-71S-0.3SHAW(05)	CL586-1321-7-05	71	44	40.4	20.2	24.1	21.9	21.3	44.5

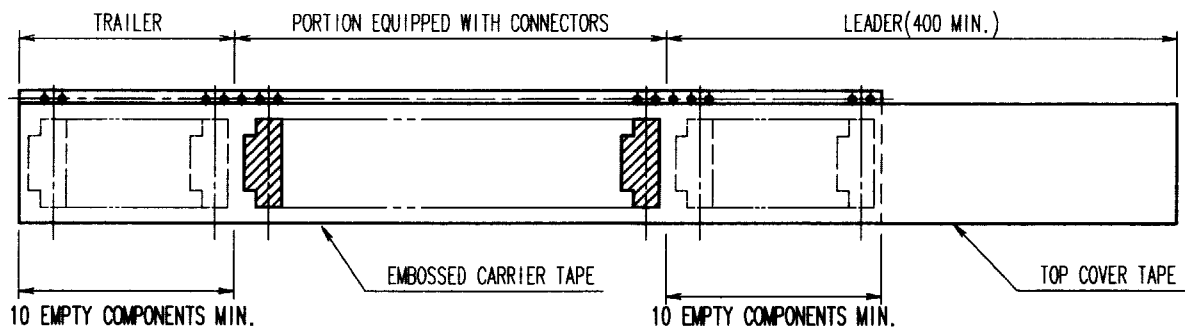

2	POLYESTER		4		
1	POLYSTYRENE		3	(CONNECTOR)	
NO.	MATERIAL	FINISH, REMARKS	NO.	MATERIAL	FINISH, REMARKS

CODE NO.(OLD)	DRAWN	DESIGNED	CHECKED	APPROVED	RELEASED
	S.OKAMURA 02.11.11	S.OKAMURA 02.11.11	R.Takayama '02.11.11	M. Sakuda 02.11.12	. .

SCALE 2 : 1
UNITS mm

DRAWING NO. EDC3-153685-01

HRS HIROSE ELECTRIC CO., LTD

PART NO. FH23-*S-0.3SHAW(05)

CODE NO. CL586- 2

TO NC

FORM NO.229