Sep.1.2025 Copyright 2025 HIROSE ELECTRIC CO., LTD. All Rights Reserved.
In case of consideration for using Automotive equipment / device which demand high reliability, kindly contact our sales window correspondents.

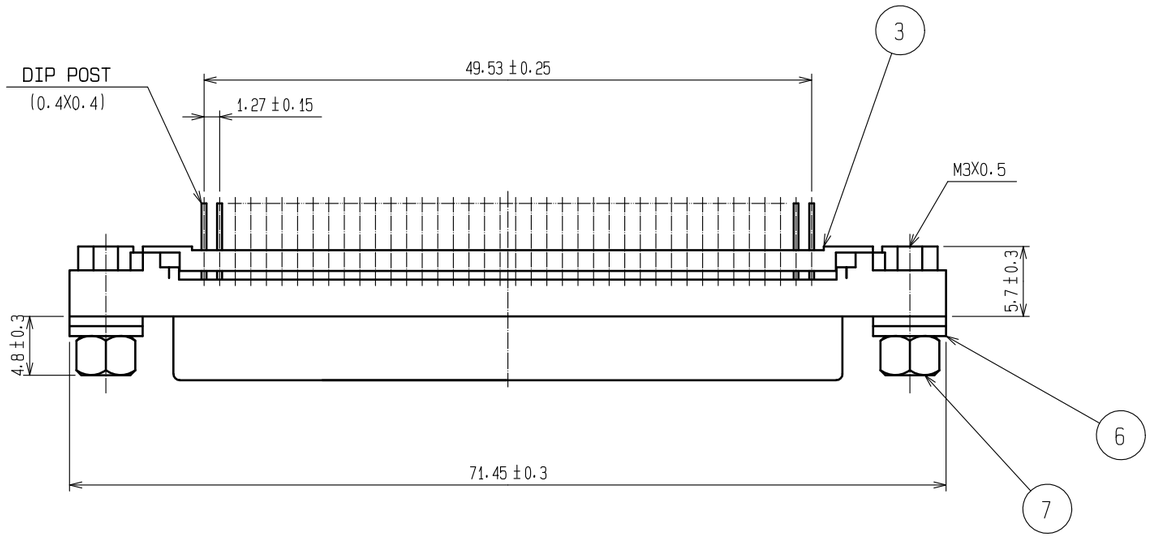

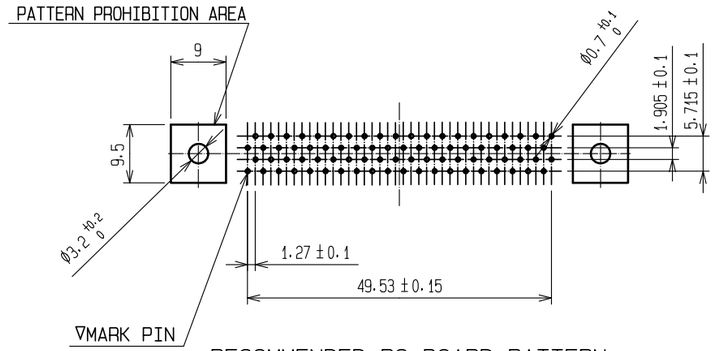

RECOMMENDED PC BOARD PATTERN
(SCALE 1/1)

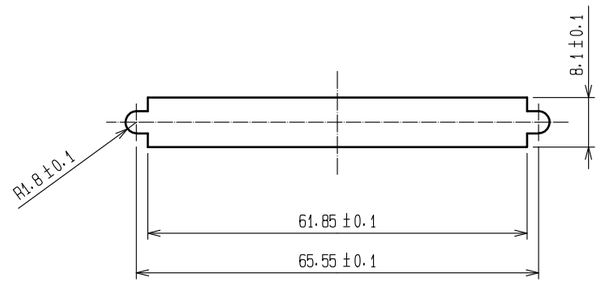

RECOMMENDED PANEL CUOUT
(PANEL THICKNESS : 2mm MAX)

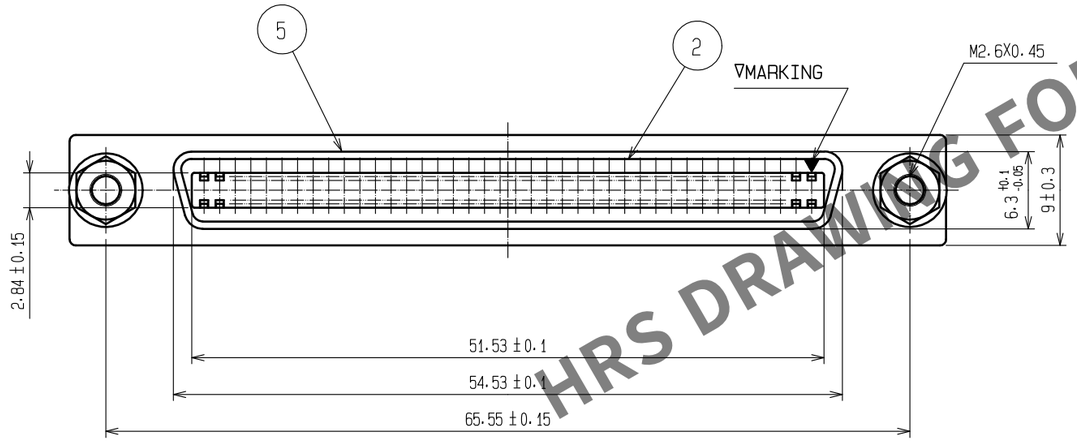

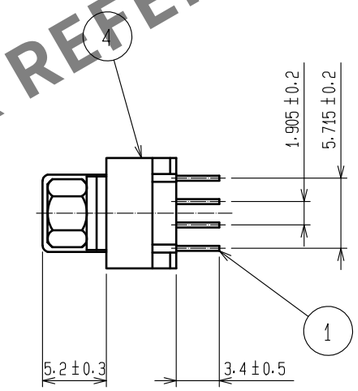

HRS DRAWING FOR REFERENCE

NOTES 1 ADJUST THE NUMBER OF WASHERS ACCORDING TO THE CONFORMITY PANEL THICKNESS.

PANEL THICKNESS	NUMBER OF WASHER
0 ~ t = 0.4	2
t = 0.8 ~ 1.2	1
t = 1.6 ~ 2.0	0

2 2 This product must be screwed to the board.
Please prepare the screws by the customer.
<SCREW REQUIREMENTS>
NOMINAL DIAMETER: M3 x 0.5
SCREW LENGTH : 2 ± 0.5 + BOARD thickness 't'

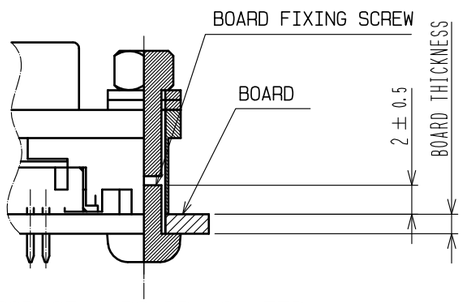

2 2 PRODUCT - BOARD MOUNTED

NO.	MATERIAL	FINISH , REMARKS	NO.	MATERIAL	FINISH , REMARKS
4	ZINC ALLOY DIE CASTING	NICKEL PLATING			
3	PBT	UL94V-0(BLACK)	7	BRASS	NICKEL PLATING
2	PBT	UL94V-0(BLACK)	6	STEEL	NICKEL PLATING
1	PHOSPHOR BRONZE	SELECTIVE GOLD PLATING 0.3 μm	5	STEEL	NICKEL PLATING

UNITS	SCALE		COUNT	DESCRIPTION OF REVISIONS	DESIGNED	CHECKED	DATE
mm	2 : 1	2	2	DIS-E-00010989	KG.OKITA	MN.KENJO	20220908

HRS HIROSE ELECTRIC CO., LTD.

APPROVED	: HO.MIWA	20050105	DRAWING NO.	EDC3-041446-01
CHECKED	: YH.ENAMI	20050105	PART NO.	DX20BM-80S(50)
DESIGNED	: TU.TANIGUCHI	20050105	CODE NO.	CL0230-5021-6-50
DRAWN	: TU.TANIGUCHI	20050105		2 1/1

FORM HC0011-5-7