Oct.1.2025 Copyright 2025 HIROSE ELECTRIC CO., LTD. All Rights Reserved.
In case of consideration for using Automotive equipment / device which demand high reliability, kindly contact our sales window correspondents.

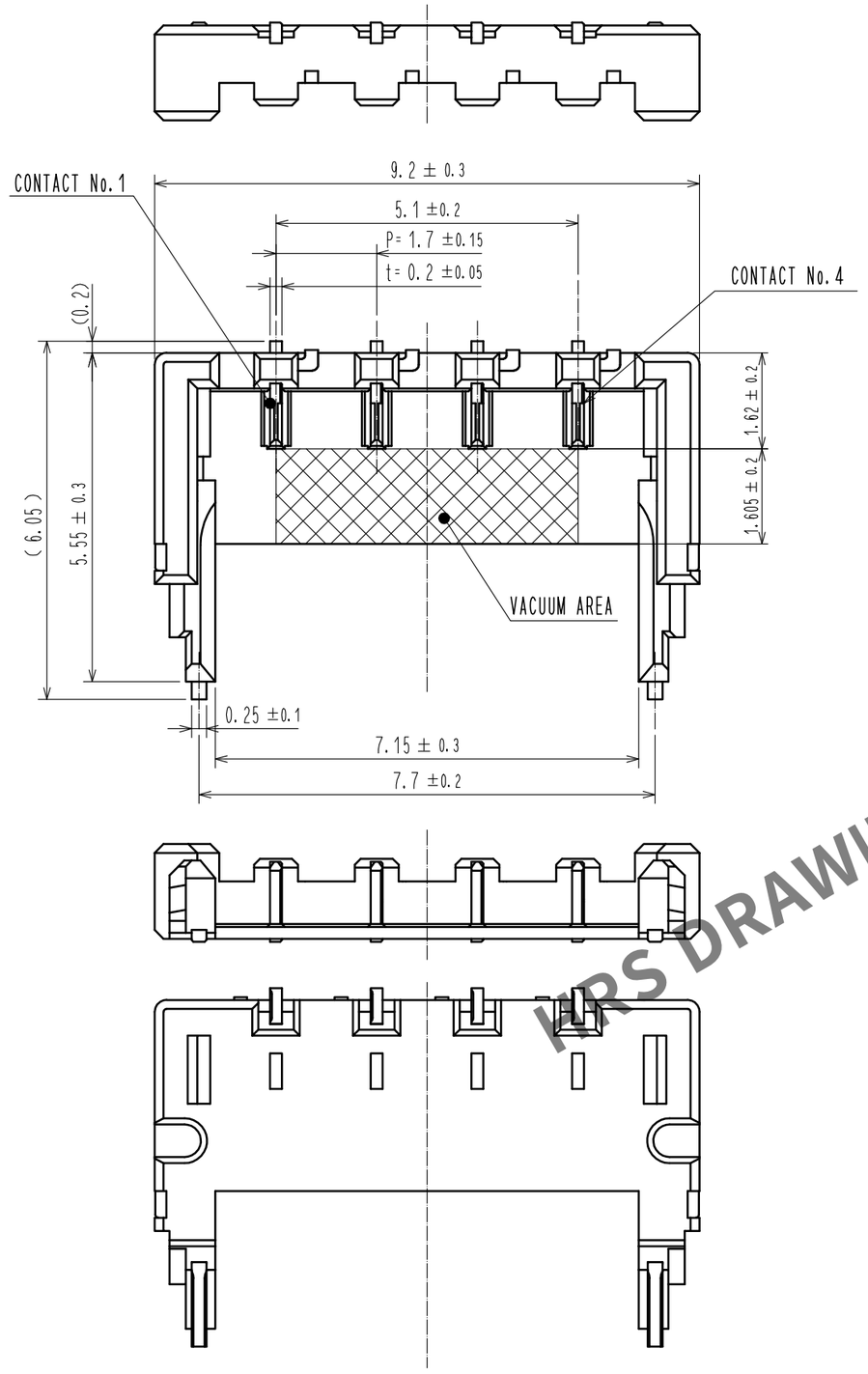

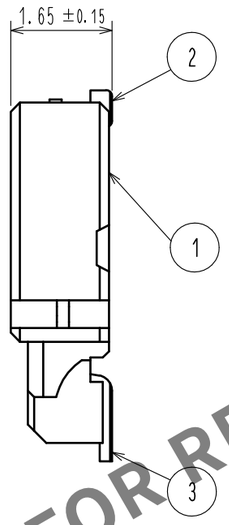

RECOMMENDED PCB LAYOUT (MOUNTING SURFACE SIDE)(FREE)
RECOMMENDED METAL MASK (FREE)
THICKNESS : 0.1mm

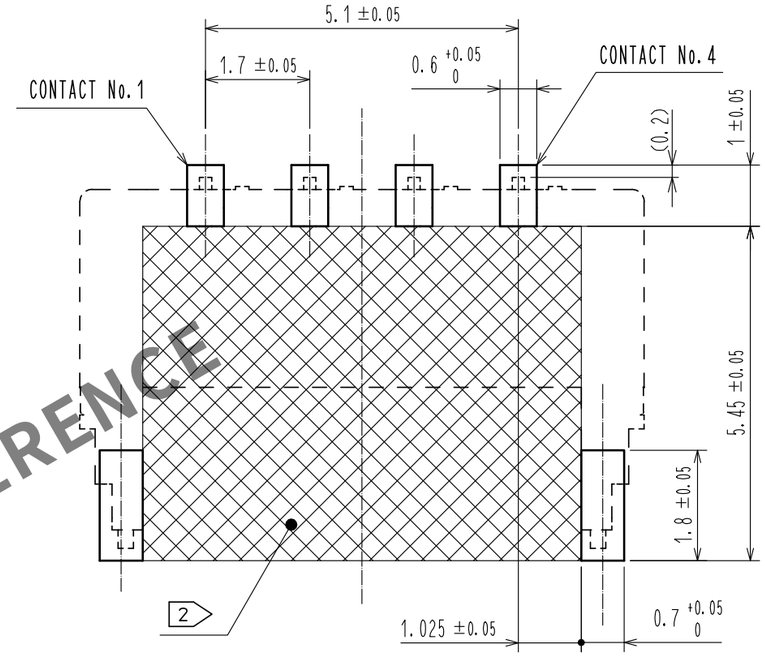

HRS DRAWING FOR REFERENCE

MATING FIGURE (FREE)

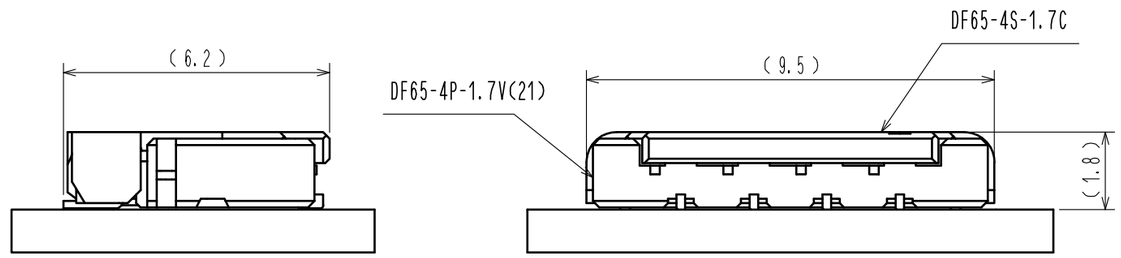

NOTE1. LEAD CO-PLANARITY SHALL BE 0.1mmMAX
2 AREA INDICATED MUST BE FREE OF CONDUCTIVE TRACES OR THE CONDUCTIVE TRACES MUST BE COVERED BY RESIST FILM.
3. PLEASE CONSULT HIROSE WHEN THE PRODUCT IS MONUTED TO FPC.

NO.	MATERIAL	FINISH . REMARKS	NO.	MATERIAL	FINISH . REMARKS
3	BRASS	SURFACE:TIN PLATING 1μmMIN UNDER PLATING:NICKEL PLATING 0.5μmMIN			
2	BRASS	SURFACE:TIN PLATING 1μmMIN UNDER PLATING:NICKEL PLATING 0.5μmMIN	6	PS	REEL. BLACK
			5	POLYESTER	CLEER(COVER TAPE)
1	LCP	UL94V-0. BLACK	4	PS	CLEER(ENBOSSED CARIER TAPE)

UNITS	SCALE	COUNT	DESCRIPTION OF REVISIONS	DESIGNED	CHECKED	DATE
mm	10 : 1	2 3	DIS-H-00004863	SN. MIWA	SZ. ONO	20190517

HRS HIROSE ELECTRIC CO., LTD.

APPROVED	: KI. AKIYAMA	20140115	DRAWING NO.	EDC-351454-21-01
CHECED	: OM. MIYAMOTO	20140115	PART NO.	DF65-4P-1.7V(21)
DESIGNED	: TT. OHSAKO	20140114	CODE NO.	CL666-6006-0-21
DRAWN	: TT. OHSAKO	20140114		2 1/2

FORM HC0011-5-7_AN

Oct.1.2025 Copyright 2025 HIROSE ELECTRIC CO., LTD. All Rights Reserved.
In case of consideration for using Automotive equipment / device which demand high reliability, kindly contact our sales window correspondents.

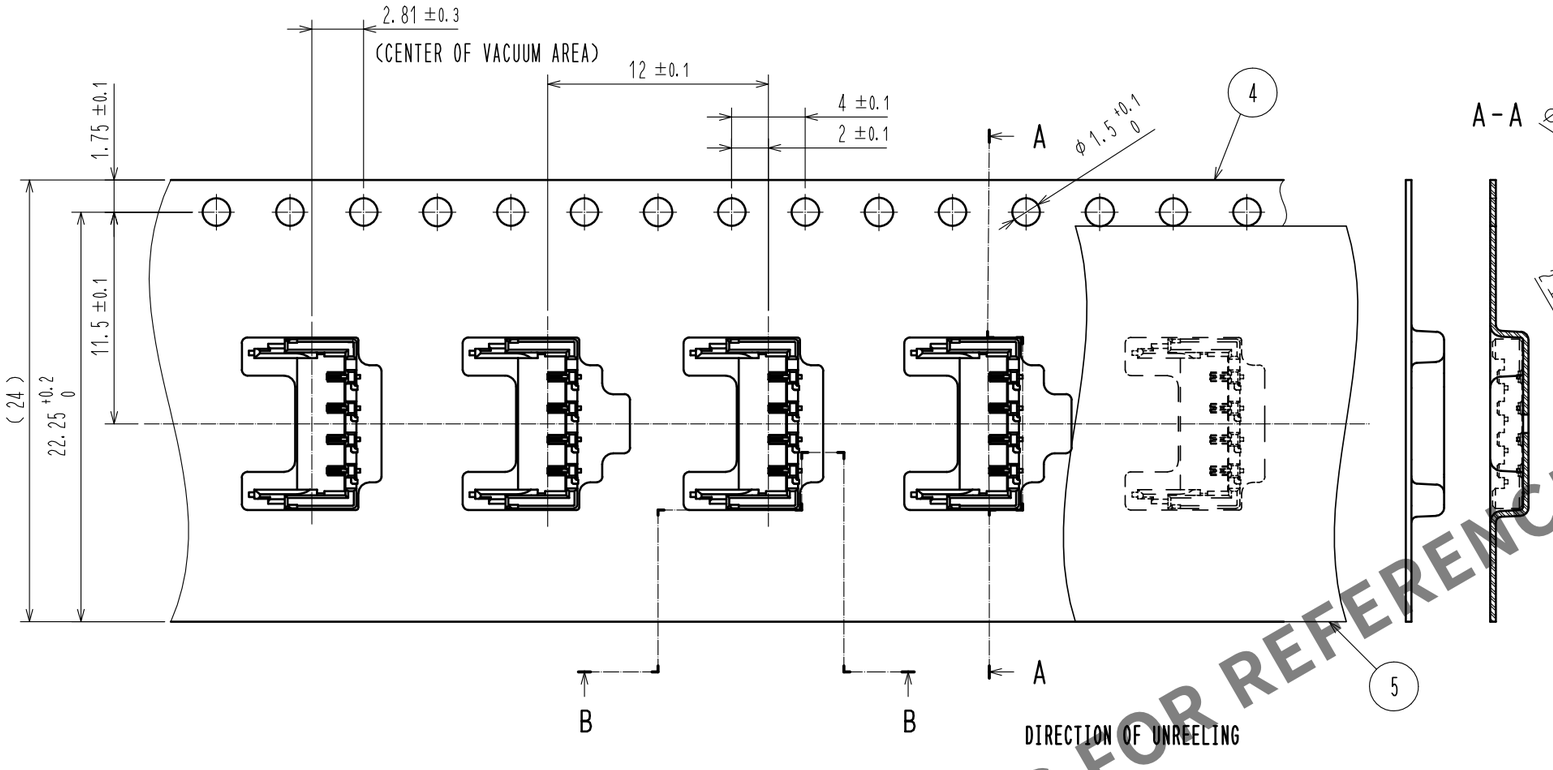

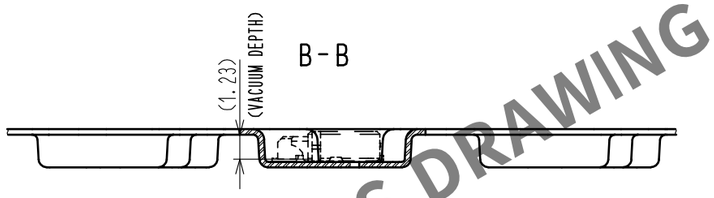

STYLE AND DIMENSION OF REEL (FREE)

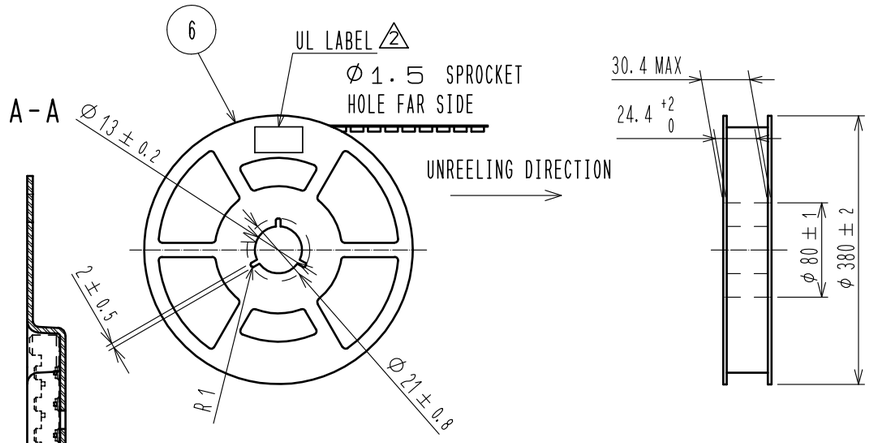

2 DETAIL OF UL LABEL

HRS HIROSE ELECTRIC CO., LTD **

666-6006-0-21	
DF65-4P-1.7V(21)	
Quantity(数量)	4000 個
Lot No.(ロット番号)	18.06.28
Operating Voltage	AC 50 V
Current Rating	4.5A

CAUTION:NOT FOR INTERRUPTING CURRENT.
FOR USE IN CLASS 2 CIRCUITS ONLY.
ATTENTION:NE PAS UTILISIER POUR COUPER LE COURANT
UTILISIER DANS LES CIRCUITS DE CLASSE 2 SEULEMENT.

HRS DRAWING FOR REFERENCE

5 TAPING (FREE)

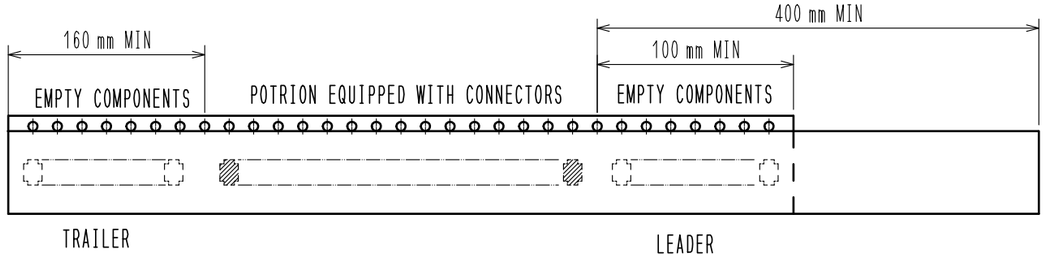

REFLOW TEMPERATURE PROFILE USING LEAD-FREE SOLDER PASTE (REFERENCE)

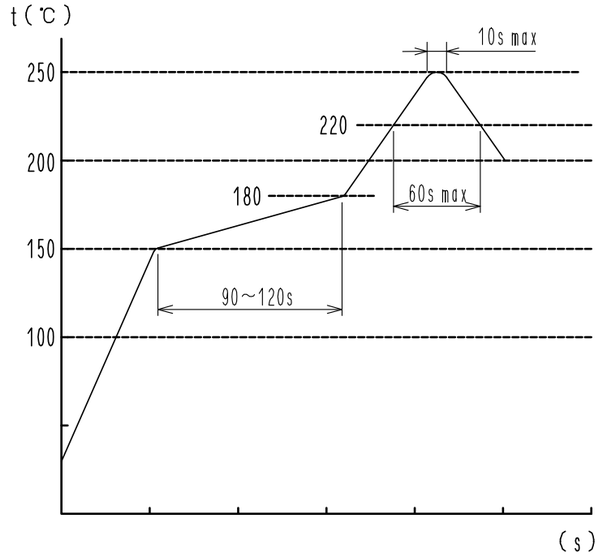

NUMBER OF REFLOW CYCLES 2 CYCLES MAX.
THE TEMPERATURE IS MEASURED IN THE TERMINAL LEAD PART.

ADDITIONAL FACTORS, SUCH AS SOLDER PASTE TYPE, PCB SIZE AND OTHER MOUNTED COMPONENTS COULD AFFECT THE PROFILE, THEREFORE, A THOROUGH EVALUATION OF MOUNTING CONDITION IS REQUIRED PRIOR TO PRODUCTION.

NOTE4. 1 REEL : 4000 CONNECTORS
5 REFER TO IEC 60286.(PACKAGING OF COMPONENTS FOR AUTOMATIC HANDLING)
6. THE DIMENSIONS IN PARENTHESES ARE FOR REFERENCE.
2 7. UL(FILE NO.E52653),
C-UL(FILE NO.E52653) AUTHORIZATION ARTICLE.

DRAWING NO.	EDC-351454-21-01
PART NO.	DF65-4P-1.7V(21)
CODE NO.	CL666-6006-0-21

2 2/2