Apr.1.2025 Copyright 2025 HIROSE ELECTRIC CO., LTD. All Rights Reserved.
In case of consideration for using Automotive equipment / device which demand high reliability, kindly contact our sales window correspondents.

	COUNT	DESCRIPTION OF REVISIONS	BY	CHKD	DATE		COUNT	DESCRIPTION OF REVISIONS	BY	CHKD	DATE
△					. .	△					. .
△					. .	△					. .
△					. .	△					. .

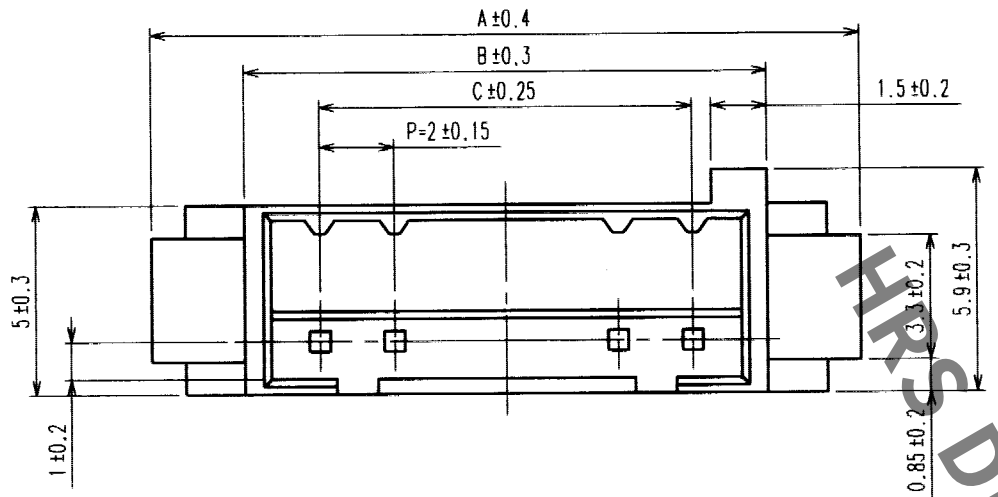

PRODUCT NO	HRS NO.	CONTACTS	A	B	C	D	E
DF3AA- 2EP-2C	CL543-0151-5	2	11.0	6.0	2.0	9.4	6.3
DF3AA- 3EP-2C	CL543-0152-8	3	13.0	8.0	4.0	11.4	8.3
DF3AA- 4EP-2C	CL543-0153-0	4	15.0	10.0	6.0	13.4	10.3
DF3AA- 5EP-2C	CL543-0154-3	5	17.0	12.0	8.0	15.4	12.3
DF3AA- 6EP-2C	CL543-0155-6	6	19.0	14.0	10.0	17.4	14.3
DF3AA- 7EP-2C	CL543-0156-9	7	21.0	16.0	12.0	19.4	16.3
DF3AA- 8EP-2C	CL543-0157-1	8	23.0	18.0	14.0	21.4	18.3
DF3AA- 9EP-2C	CL543-0158-4	9	25.0	20.0	16.0	23.4	20.3
DF3AA-10EP-2C	CL543-0159-7	10	27.0	22.0	18.0	25.4	22.3
DF3AA-11EP-2C	CL543-0160-6	11	29.0	24.0	20.0	27.4	24.3
DF3AA-12EP-2C	CL543-0161-9	12	31.0	26.0	22.0	29.4	26.3
DF3AA-13EP-2C	CL543-0162-1	13	33.0	28.0	24.0	31.4	28.3
DF3AA-14EP-2C	CL543-0163-4	14	35.0	30.0	26.0	33.4	30.3
DF3AA-15EP-2C	CL543-0164-7	15	37.0	32.0	28.0	35.4	32.3

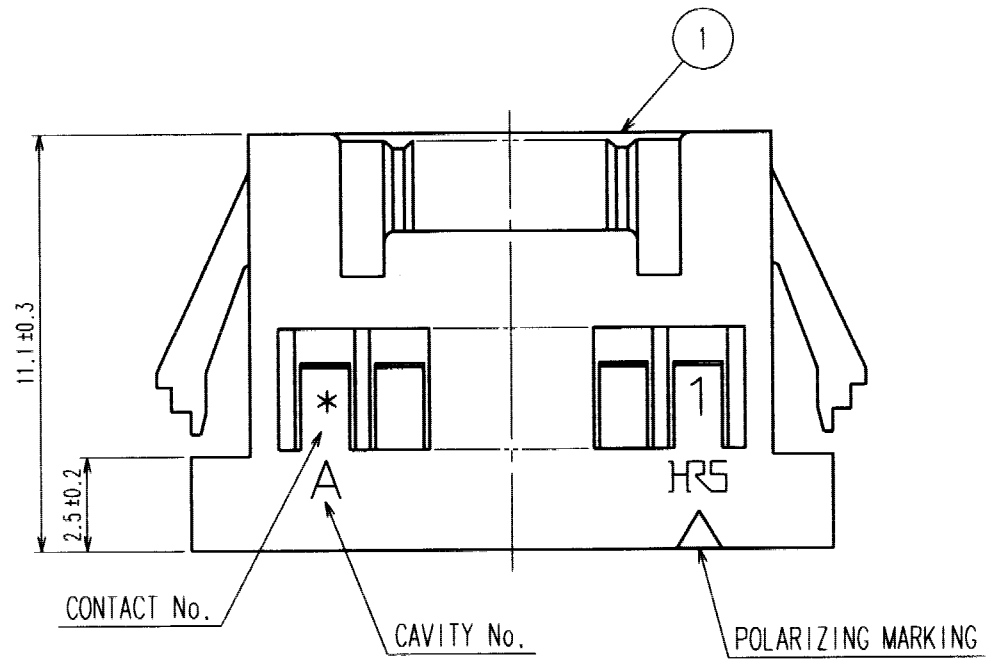

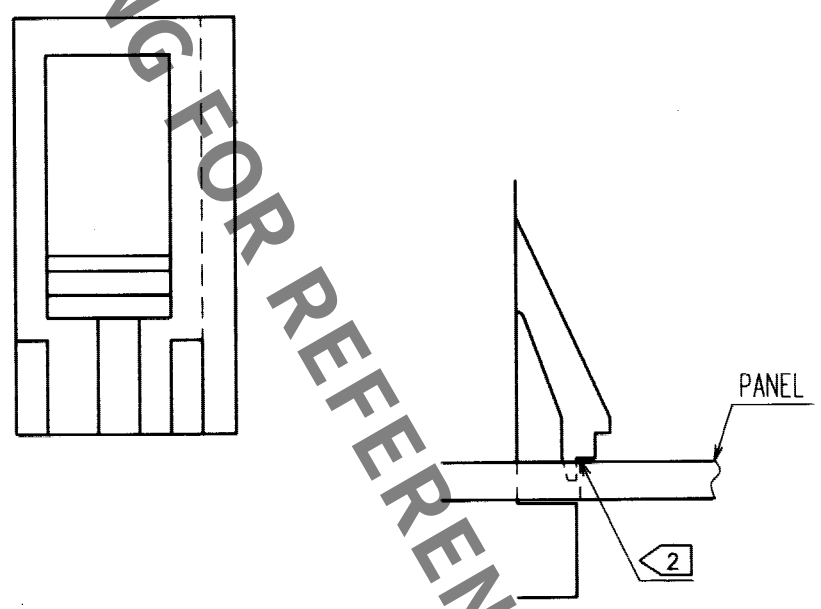

PANEL CUTOUT DIMENSIONS

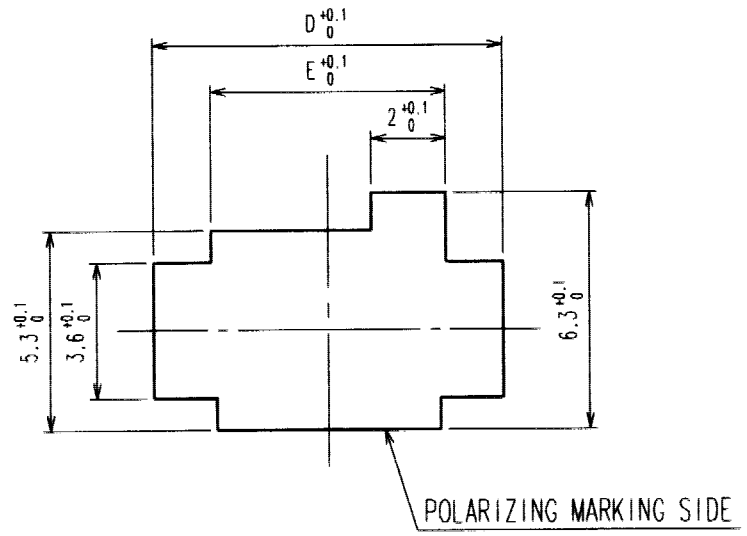

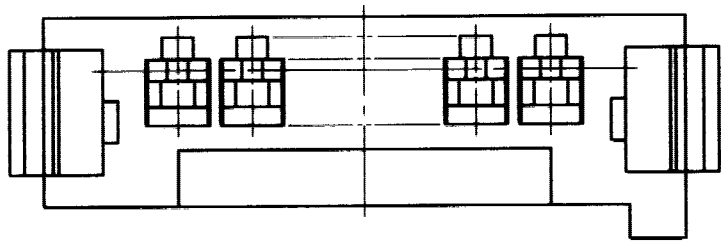

NOTES 1 APPLICABLE PANEL THICKNESS:1.6 ~ 0.8 mm
(NOTE THAT SOME LOOSENESS IS UNAVOIDABLE WHEN THE PLUGS ARE MOUNTED ON A PANEL OF OTHER THAN 1.6 OR 1.2 mm THICKNESS.)
2 USE THE SHARP EDGE FOR ENGAGEMENT WITH THE PANEL.

NO.	MATERIAL	FINISH, REMARKS	NO.	MATERIAL	FINISH, REMARKS
			1	POLYAMIDE	BLACK, UL94V-0

CODE NO.(OLD)	DRAWN	DESIGNED	CHECKED	APPROVED	RELEASED
	S.Denpouya '03.4.14	S.Denpouya '03.4.14	T.Miyazaki 03.04.15	T.Miyazaki '03.04.15	

SCALE	DRAWING NO.	PART NO.
5 : 1	EDC3-162399-01	DF3AA-*EP-2C
UNITS mm	HRS HIROSE ELECTRIC CO., LTD	CODE NO. CL543 — 1/1

TO

FOR REFERENCE