XMC1400 AA-Step

Microcontroller Series for Industrial Applications

ARM® Cortex®-M0
32-bit processor core

About this Document

This datasheet is addressed to embedded hardware and software developers. It provides the reader with detailed descriptions about the ordering designations, available features, electrical and physical characteristics of the XMC1400 series devices.

The document describes the characteristics of a superset of the XMC1400 series devices. For simplicity, the various device types are referred to by the collective term XMC1400 throughout this document.

XMC1000 Family User Documentation

The set of user documentation includes:

- **Reference Manual**
  - describes the functionality of the superset of devices.
- **Datasheets**
  - list the complete ordering designations, available features and electrical characteristics of derivative devices.
- **Errata Sheets**
  - list deviations from the specifications given in the related Reference Manual or Datasheets. Errata Sheets are provided for the superset of devices.

Attention**: **Please consult all parts of the documentation set to attain consolidated knowledge about your device.

Application related guidance is provided by **Users Guides** and **Application Notes**.

Please refer to http://www.infineon.com/xmc1000 to get access to the latest versions of those documents.

Table of contents

About this Document . . . 1
Table of contents . . . 2
1 Summary of Features . . . 4
1.1 Device Overview . . . 7
1.2 Ordering Information . . . 9
1.3 Device Types . . . 9
1.4 Chip Identification Number . . . 12
2 General Device Information . . . 16
2.1 Logic Symbols . . . 16
2.2 Pin Configuration and Definition . . . 21
2.2.1 Package Pin Summary . . . 26
2.2.2 Port Pin for Boot Modes . . . 30
2.2.3 Port I/O Function Description . . . 30
2.2.4 Hardware Controlled I/O Function Description . . . 31
3 Electrical Parameters . . . 50
3.1 General Parameters . . . 50
3.1.1 Parameter Interpretation . . . 50
3.1.2 Absolute Maximum Ratings . . . 50
3.1.3 Pin Reliability in Overload . . . 51
3.1.4 Operating Conditions . . . 52
3.2 DC Parameters . . . 53
3.2.1 Input/Output Characteristics . . . 53
3.2.2 Analog to Digital Converters (ADC) . . . 56
3.2.3 Out of Range Comparator (ORC) Characteristics . . . 58
3.2.4 Analog Comparator Characteristics . . . 60
3.2.5 Temperature Sensor Characteristics . . . 61
3.2.6 Oscillator Pins . . . 61
3.2.7 Power Supply Current . . . 63
3.2.8 Flash Memory Parameters . . . 66
3.3 AC Parameters . . . 67
3.3.1 Testing Waveforms . . . 67
3.3.2 Power-Up and Supply Threshold Characteristics . . . 68
3.3.3 On-Chip Oscillator Characteristics . . . 69
3.3.4 Serial Wire Debug Port (SW-DP) Timing . . . 70
3.3.5 SPD Timing Requirements . . . 71
3.3.6 Peripheral Timings . . . 71
3.3.6.1 Synchronous Serial Interface (USIC SSC) Timing . . . 71
3.3.6.2 Inter-IC (IIC) Interface Timing . . . 74

3.3.6.3 Inter-IC Sound (IIS) Interface Timing . . . 76

4 Package and Reliability . . . 78

4.1 Package Parameters . . . 78

4.1.1 Thermal Considerations . . . 78

4.2 Package Outlines . . . 79

5 Quality Declaration . . . 83

Revision history . . . 84

Disclaimer . . . 85

1 Summary of Features

The XMC1400 devices are members of the XMC1000 Family of microcontrollers based on the ARM Cortex-M0 processor core. The XMC1400 series addresses the real-time control needs of motor control and digital power conversion. It also features peripherals for LED Lighting applications and Human-Machine Interface (HMI).

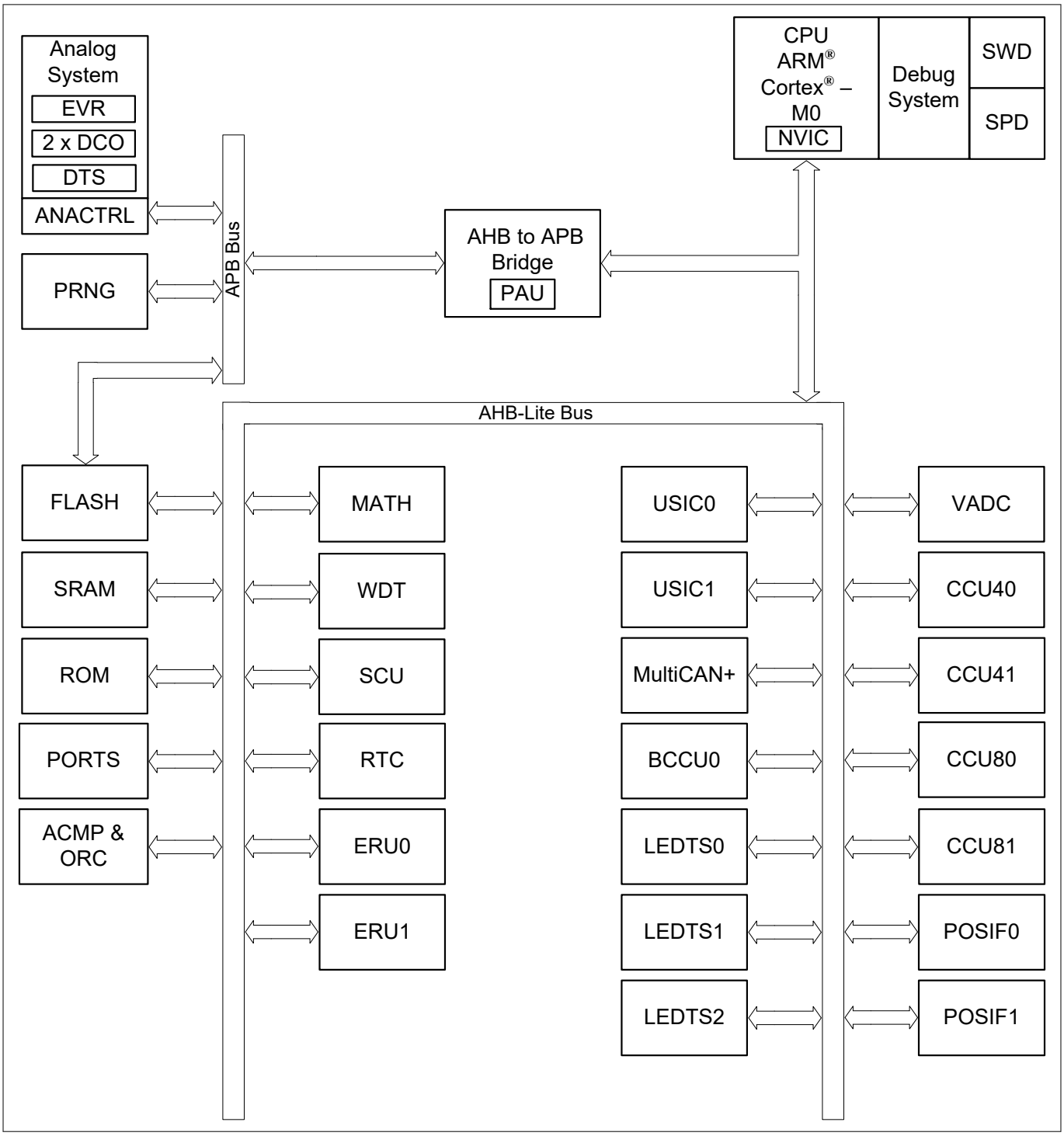

Figure 1 Block Diagram

CPU Subsystem

- 32-bit ARM Cortex-M0 CPU Core
  - 0.84 DMIPS/MHz (Dhrystone 2.1) at 48 MHz
- Nested Vectored Interrupt Controller (NVIC)
- 64 interrupt nodes
- MATH coprocessor
  - 24-bit trigonometric calculation (CORDIC)
  - 32-bit divide operation
- 2x4 channels ERU for event interconnections

On-Chip Memories

- 8 kbytes ROM
- 16 kbytes SRAM (with parity)
- up to 200 kbytes Flash (with ECC)

Supply, Reset and Clock

- 1.8 V to 5.5 V supply with power on reset and brownout detector
- On-chip clock monitor
- External crystal oscillator support (32 kHz and 4 to 20 MHz)
- Internal slow and fast oscillators without the need of PLL

System Control

- Window watchdog
- Real time clock module
- Pseudo random number generator

Communication Peripherals

- Four USIC channels, usable as
  - UART (up to 12 Mb/s)
  - single-SPI (up to 12 Mb/s)
  - double-SPI (up to 2 × 12 Mb/s)
  - quad-SPI (up to 4 × 12 Mb/s)
  - IIC (up to 400 kb/s)
  - IIS (up to 12 Mb/s)
  - LIN interfaces (20 kb/s)
- LEDTS in Human-Machine interface
  - up to 24 touch pads
  - drive up to 144 LEDs
- MultiCAN+, Full-CAN/Basic-CAN with 2 nodes, 32 message objects (up to 1 MBaud)

Analog Frontend Peripherals

- A/D Converters (up to 12 analog inputs)
  - 2 sample and hold stages
  - fast 12-bit ADC (up to 1.1 MS/s), adjustable gain
  - 0 V to 5.5 V input range

- Up to 8 channels out of range comparators
- Up to 4 fast analog comparators
- Temperature Sensor (TSE)

Industrial Control Peripherals

- 2x4 16-bit 96 MHz CCU4 timers for signal monitoring and PWM
- 2x4 16-bit 96 MHz CCU8 timers for complex PWM, complementary high/low side switches and multi phase control
- 2x POSIF for hall and quadrature encoders, motor positioning
- 9 channel BCCU (brightness and color control) for LED lighting applications

Up to 56 Input/Output Ports

- 1.8 V to 5.5 V capable
- up to 8 high current pads (50 mA sink)

On-Chip Debug Support

- 4 breakpoints, 2 watchpoints
- ARM serial wire debug, single-pin debug interfaces

Programming Support

- Single-pin bootloader
- Secure bootstrap loader SBSL (optional)

Packages

- TSSOP-38 (9.7 × 6.4 mm^2)
- VQFN-40/48/64 (5×5/7×7/8×8 mm^2)
- LQFP-48/64 (7 × 7/12 × 12 mm^2)

Tools

- Free ModusToolbox™ toolchain with low-level drivers and apps

1.1 Device Overview

The following table lists the available features per device type for the XMC1400 series.

Table 1 Features of XMC1400 Device Types[1)]

Features		XMC 1401 -T038	XMC 1401 -Q048	XMC 1401 -F048	XMC 1401 -F064	XMC 1402 -T038	XMC 1402 -Q040	XMC 1402 -Q048	XMC 1402 -Q064	XMC 1402 -F048	XMC 1402 -F064	XMC 1403 -Q040	XMC 1403 -Q048	XMC 1403 -Q064	XMC 1404 -Q040	XMC 1404 -Q048	XMC 1404 -Q064	XMC 1404 -F048	XMC 1404 -F064
CPU frequency		48 MHz																	
Operating temperature (ambient)		-40 to 105° C	-40 to 85°C	-40 to 105° C	-40 to 85°C	-40 to 105°C													
Operating voltage		1.8 V to 5.5 V																	
Flash options (Kbytes)		64, 128, 200	64, 128 64, 128	32, 64, 128, 200	64, 128 64, 128	32, 64, 128, 200			64, 128, 200	32, 64, 128, 200	64, 128, 200								
SRAM (Kbytes)		16	16	16	16	16	16	16	16	16	16	16	16	16	16	16	16	16	16
MATH		–	–	-	–	1	1	1	1	1	1	–	–	–	1	1	1	1	1
Industrial Control	CCU4	2	2	2	2	2	2	2	2	2	2	2	2	2	2	2	2	2	2
	CCU8	–	–	-	–	2	2	2	2	2	2	–	–	–	2	2	2	2	2
	POSIF	–	–	-	–	1	1	2	2	2	2	–	–	–	1	2	2	2	2
	BCCU	–	–	-	–	1	1	1	1	1	1	–	–	–	1	1	1	1	1

(table continues...)

Table 1 (continued) Features of XMC1400 Device Types[1)]

Features		XMC1401-T038	XMC1401-Q048	XMC1401-F048	XMC1401-F064	XMC1402-T038	XMC1402-Q040	XMC1402-Q048	XMC1402-Q064	XMC1402-F048	XMC1402-F064	XMC1403-Q040	XMC1403-Q048	XMC1403-Q064	XMC1404-Q040	XMC1404-Q048	XMC1404-Q064	XMC1404-F048	XMC1404-F064
Communication	USIC (modules/channels)	2/4	2/4	2/4	2/4	2/4	2/4	2/4	2/4	2/4	2/4	2/4	2/4	2/4	2/4	2/4	2/4	2/4	2/4
	LEDTS	3	3	3	3	–	–	–	–	–	–	–	–	–	2	3	3	3	3
	MultiCAN+ (nodes/MOs)	–	–	–	–	–	–	–	–	–	–	2/32	2/32	2/32	2/32	2/32	2/32	2/32	2/32
Analog	ADC (kernels/analog inputs)	2/12	2/12	2/14	2/12	2/12	2/12	2/12	2/12	2/14	2/12	2/12	2/12	2/12	2/12	2/12	2/12	2/14	2/12
	ACMP	–	–	-	–	3	3	4	4	4	4	–	–	–	3	4	4	4	4
GPIOs		26	34	35	48	26	27	34	48	35	48	27	34	48	27	34	48	35	48
GPIs		8	8	8	8	8	8	8	8	8	8	8	8	8	8	8	8	8	8
Packages		TSSOP-38	VQFN-48	LQFP-48	LQFP-64	TSSOP-38	VQFN-40	VQFN-48	VQFN-64	LQFP-48	LQFP-64	VQFN-40	VQFN-48	VQFN-64	VQFN-40	VQFN-48	VQFN-64	LQFP-48	LQFP-64

1) Features that are not included in this table are available in all the derivatives.

1.2 Ordering Information

The ordering code for an Infineon microcontroller provides an exact reference to a specific product. The code "XMC1<DDD>-<Z><PPP><T><FFFF>" identifies:

- <DDD> the derivatives function set
- <Z> the package variant
  - T: TSSOP
  - Q: VQFN
  - F: LQFP
- <PPP> package pin count
- <T> the temperature range:
  - F: -40°C to 85°C
  - X: -40°C to 105°C
- <FFFF> the Flash memory size in Kbytes

For ordering codes for the XMC1400 please contact your sales representative or local distributor.

This document describes several derivatives of the XMC1400 series, some descriptions may not apply to a specific product. Please see Table 2.

For simplicity the term **XMC1400** is used for all derivatives throughout this document.

1.3 Device Types

These device types are available and can be ordered through Infineon's direct and/or distribution channels.

Table 2 Synopsis of XMC1400 Device Types

Derivative	Package	Flash Kbytes
XMC1401-T038X0064	PG-TSSOP-38	64
XMC1401-T038X0128	PG-TSSOP-38	128
XMC1401-T038X0200	PG-TSSOP-38	200
XMC1401-Q048F0064	PG-VQFN-48	64
XMC1401-Q048F0128	PG-VQFN-48	128
XMC1401-F048X0032	PG-LQFP-48	32
XMC1401-F048X0064	PG-LQFP-48	64
XMC1401-F048X0128	PG-LQFP-48	128
XMC1401-F048X0200	PG-LQFP-48	200
XMC1401-F064F0064	PG-LQFP-64	64
XMC1401-F064F0128	PG-LQFP-64	128
XMC1402-T038X0032	PG-TSSOP-38	32
XMC1402-T038X0064	PG-TSSOP-38	64
XMC1402-T038X0128	PG-TSSOP-38	128
XMC1402-T038X0200	PG-TSSOP-38	200
XMC1402-Q040X0032	PG-VQFN-40	32

(table continues...)

Table 2 (continued) Synopsis of XMC1400 Device Types

Derivative	Package	Flash Kbytes
XMC1402-Q040X0064	PG-VQFN-40	64
XMC1402-Q040X0128	PG-VQFN-40	128
XMC1402-Q040X0200	PG-VQFN-40	200
XMC1402-Q048X0032	PG-VQFN-48	32
XMC1402-Q048X0064	PG-VQFN-48	64
XMC1402-Q048X0128	PG-VQFN-48	128
XMC1402-Q048X0200	PG-VQFN-48	200
XMC1402-Q064X0064	PG-VQFN-64	64
XMC1402-Q064X0128	PG-VQFN-64	128
XMC1402-Q064X0200	PG-VQFN-64	200
XMC1402-F048X0032	PG-LQFP-48	32
XMC1402-F048X0064	PG-LQFP-48	64
XMC1402-F048X0128	PG-LQFP-48	128
XMC1402-F048X0200	PG-LQFP-48	200
XMC1402-F064X0064	PG-LQFP-64	64
XMC1402-F064X0128	PG-LQFP-64	128
XMC1402-F064X0200	PG-LQFP-64	200
XMC1403-Q040X0064	PG-VQFN-40	64
XMC1403-Q040X0128	PG-VQFN-40	128
XMC1403-Q040X0200	PG-VQFN-40	200
XMC1403-Q048X0064	PG-VQFN-48	64
XMC1403-Q048X0128	PG-VQFN-48	128
XMC1403-Q048X0200	PG-VQFN-48	200
XMC1403-Q064X0064	PG-VQFN-64	64
XMC1403-Q064X0128	PG-VQFN-64	128
XMC1403-Q064X0200	PG-VQFN-64	200
XMC1404-Q040X0064	PG-VQFN-40	64
XMC1404-Q040X0128	PG-VQFN-40	128
XMC1404-Q040X0200	PG-VQFN-40	200
XMC1404-Q048X0064	PG-VQFN-48	64
XMC1404-Q048X0128	PG-VQFN-48	128
XMC1404-Q048X0200	PG-VQFN-48	200
XMC1404-Q064X0064	PG-VQFN-64	64

(table continues...)

Table 2 (continued) Synopsis of XMC1400 Device Types

Derivative	Package	Flash Kbytes
XMC1404-Q064X0128	PG-VQFN-64	128
XMC1404-Q064X0200	PG-VQFN-64	200
XMC1404-F048X0064	PG-LQFP-48	64
XMC1404-F048X0128	PG-LQFP-48	128
XMC1404-F048X0200	PG-LQFP-48	200
XMC1404-F064X0064	PG-LQFP-64	64
XMC1404-F064X0128	PG-LQFP-64	128
XMC1404-F064X0200	PG-LQFP-64	200

1.4 Chip Identification Number

The Chip Identification Number allows software to identify the marking. It is an 8 words value with the most significant 7 words stored in Flash configuration sector 0 (CS0) at address location: 1000 0F00$_H$ (MSB) - 1000 0F1B$_H$ (LSB). The least significant word and most significant word of the Chip Identification Number are the value of registers DBGROMID and IDCHIP, respectively.

Table 3 XMC1400 Chip Identification Number

Derivative	Value	Marking
XMC1401-T038X0064	00014013 07CF00FF 1E071FF7 20006000 00000D00 00001000 00011000 FFFFFFFF$_H$	AA
XMC1401-T038X0128	00014013 07CF00FF 1E071FF7 20006000 00000D00 00001000 00021000 FFFFFFFF$_H$	AA
XMC1401-T038X0200	00014013 07CF00FF 1E071FF7 20006000 00000D00 00001000 00033000 FFFFFFFF$_H$	AA
XMC1401-Q048F0064	00014082 07CF00FF 1E071FF7 20006000 00000D00 00001000 00011000 10204083$_H$	AA
XMC1401-Q048F0128	00014082 07CF00FF 1E071FF7 20006000 00000D00 00001000 00021000 10204083$_H$	AA
XMC1401-F048X0032	000140B3 07CF00FF 1E071FF7 20006000 00000D00 00001000 00009000 C0DE1705$_H$	AA
XMC1401-F048X0064	000140B3 07CF00FF 1E071FF7 20006000 00000D00 00001000 00011000 C0DE1705$_H$	AA
XMC1401-F048X0128	000140B3 07CF00FF 1E071FF7 20006000 00000D00 00001000 00021000 C0DE1705$_H$	AA
XMC1401-F048X0200	000140B3 07CF00FF 1E071FF7 20006000 00000D00 00001000 00033000 C0DE1705$_H$	AA
XMC1401-F064F0064	000140A2 07CF00FF 1E071FF7 20006000 00000D00 00001000 00011000 10204083$_H$	AA
XMC1401-F064F0128	000140A2 07CF00FF 1E071FF7 20006000 00000D00 00001000 00021000 10204083$_H$	AA
XMC1402-T038X0032	00014013 07FF00FF 1E071FF7 100F900F 00000D00 00001000 00009000 10204083$_H$	AA
XMC1402-T038X0064	00014013 07FF00FF 1E071FF7 100F900F 00000D00 00001000 00011000 10204083$_H$	AA
XMC1402-T038X0128	00014013 07FF00FF 1E071FF7 100F900F 00000D00 00001000 00021000 10204083$_H$	AA
XMC1402-T038X0200	00014013 07FF00FF 1E071FF7 100F900F 00000D00 00001000 00033000 10204083$_H$	AA
XMC1402-Q040X0032	00014043 07FF00FF 1E071FF7 000F900F 00000D00 00001000 00009000 10204083$_H$	AA

(table continues...)

Table 3 (continued) XMC1400 Chip Identification Number

Derivative	Value	Marking
XMC1402-Q040X0064	00014043 07FF00FF 1E071FF7 000F900F 00000D00 00001000 00011000 10204083_H	AA
XMC1402-Q040X0128	00014043 07FF00FF 1E071FF7 000F900F 00000D00 00001000 00021000 10204083_H	AA
XMC1402-Q040X0200	00014043 07FF00FF 1E071FF7 000F900F 00000D00 00001000 00033000 10204083_H	AA
XMC1402-Q048X0032	00014083 07FF00FF 1E071FF7 100F900F 00000D00 00001000 00009000 10204083_H	AA
XMC1402-Q048X0064	00014083 07FF00FF 1E071FF7 100F900F 00000D00 00001000 00011000 10204083_H	AA
XMC1402-Q048X0128	00014083 07FF00FF 1E071FF7 100F900F 00000D00 00001000 00021000 10204083_H	AA
XMC1402-Q048X0200	00014083 07FF00FF 1E071FF7 100F900F 00000D00 00001000 00033000 10204083_H	AA
XMC1402-Q064X0064	00014093 07FF00FF 1E071FF7 100F900F 00000D00 00001000 00011000 10204083_H	AA
XMC1402-Q064X0128	00014093 07FF00FF 1E071FF7 100F900F 00000D00 00001000 00021000 10204083_H	AA
XMC1402-Q064X0200	00014093 07FF00FF 1E071FF7 100F900F 00000D00 00001000 00033000 10204083_H	AA
XMC1402-F048X0032	000140B3 07FF00FF 1E071FF7 100F900F 00000D00 00001000 00009000 $C0DE1705_H$	AA
XMC1402-F048X0064	000140B3 07FF00FF 1E071FF7 100F900F 00000D00 00001000 00011000 $C0DE1705_H$	AA
XMC1402-F048X0128	000140B3 07FF00FF 1E071FF7 100F900F 00000D00 00001000 00021000 $C0DE1705_H$	AA
XMC1402-F048X0200	000140B3 07FF00FF 1E071FF7 100F900F 00000D00 00001000 00033000 $C0DE1705_H$	AA
XMC1402-F064X0064	000140A3 07FF00FF 1E071FF7 100F900F 00000D00 00001000 00011000 10204083_H	AA
XMC1402-F064X0128	000140A3 07FF00FF 1E071FF7 100F900F 00000D00 00001000 00021000 10204083_H	AA
XMC1402-F064X0200	000140A3 07FF00FF 1E071FF7 100F900F 00000D00 00001000 00033000 10204083_H	AA
XMC1403-Q040X0064	00014043 07CF00FF 1E071FF7 00B00000 00000D00 00001000 00011000 10204083_H	AA

(table continues...)

Table 3 (continued) XMC1400 Chip Identification Number

Derivative	Value	Marking
XMC1403-Q040X0128	00014043 07CF00FF 1E071FF7 00B00000 00000D00 00001000 00021000 10204083_H	AA
XMC1403-Q040X0200	00014043 07CF00FF 1E071FF7 00B00000 00000D00 00001000 00033000 10204083_H	AA
XMC1403-Q048X0064	00014083 07CF00FF 1E071FF7 00B00000 00000D00 00001000 00011000 10204083_H	AA
XMC1403-Q048X0128	00014083 07CF00FF 1E071FF7 00B00000 00000D00 00001000 00021000 10204083_H	AA
XMC1403-Q048X0200	00014083 07CF00FF 1E071FF7 00B00000 00000D00 00001000 00033000 10204083_H	AA
XMC1403-Q064X0064	00014093 07CF00FF 1E071FF7 00B00000 00000D00 00001000 00011000 10204083_H	AA
XMC1403-Q064X0128	00014093 07CF00FF 1E071FF7 00B00000 00000D00 00001000 00021000 10204083_H	AA
XMC1403-Q064X0200	00014093 07CF00FF 1E071FF7 00B00000 00000D00 00001000 00033000 10204083_H	AA
XMC1404-Q040X0064	00014043 07FF00FF 1E071FF7 00BFF00F 00000D00 00001000 00011000 10204083_H	AA
XMC1404-Q040X0128	00014043 07FF00FF 1E071FF7 00BFF00F 00000D00 00001000 00021000 10204083_H	AA
XMC1404-Q040X0200	00014043 07FF00FF 1E071FF7 00BFF00F 00000D00 00001000 00033000 10204083_H	AA
XMC1404-Q048X0064	00014083 07FF00FF 1E071FF7 30BFF00F 00000D00 00001000 00011000 10204083_H	AA
XMC1404-Q048X0128	00014083 07FF00FF 1E071FF7 30BFF00F 00000D00 00001000 00021000 10204083_H	AA
XMC1404-Q048X0200	00014083 07FF00FF 1E071FF7 30BFF00F 00000D00 00001000 00033000 10204083_H	AA
XMC1404-Q064X0064	00014093 07FF00FF 1E071FF7 30BFF00F 00000D00 00001000 00011000 10204083_H	AA
XMC1404-Q064X0128	00014093 07FF00FF 1E071FF7 30BFF00F 00000D00 00001000 00021000 10204083_H	AA
XMC1404-Q064X0200	00014093 07FF00FF 1E071FF7 30BFF00F 00000D00 00001000 00033000 10204083_H	AA
XMC1404-F048X0064	000140B3 07FF00FF 1E071FF7 30BFF00F 00000D00 00001000 00011000 $C0DE1705_H$	AA

(table continues...)

Table 3 (continued) XMC1400 Chip Identification Number

Derivative	Value	Marking
XMC1404-F048X0128	000140B3 07FF00FF 1E071FF7 30BFF00F 00000D00 00001000 00021000 C0DE1705$_H$	AA
XMC1404-F048X0200	000140B3 07FF00FF 1E071FF7 30BFF00F 00000D00 00001000 00033000 C0DE1705$_H$	AA
XMC1404-F064X0064	000140A3 07FF00FF 1E071FF7 30BFF00F 00000D00 00001000 00011000 10204083$_H$	AA
XMC1404-F064X0128	000140A3 07FF00FF 1E071FF7 30BFF00F 00000D00 00001000 00021000 10204083$_H$	AA
XMC1404-F064X0200	000140A3 07FF00FF 1E071FF7 30BFF00F 00000D00 00001000 00033000 10204083$_H$	AA

2 General Device Information

This section summarizes the logic symbols and package pin configurations with a detailed list of the functional I/O mapping.

2.1 Logic Symbols

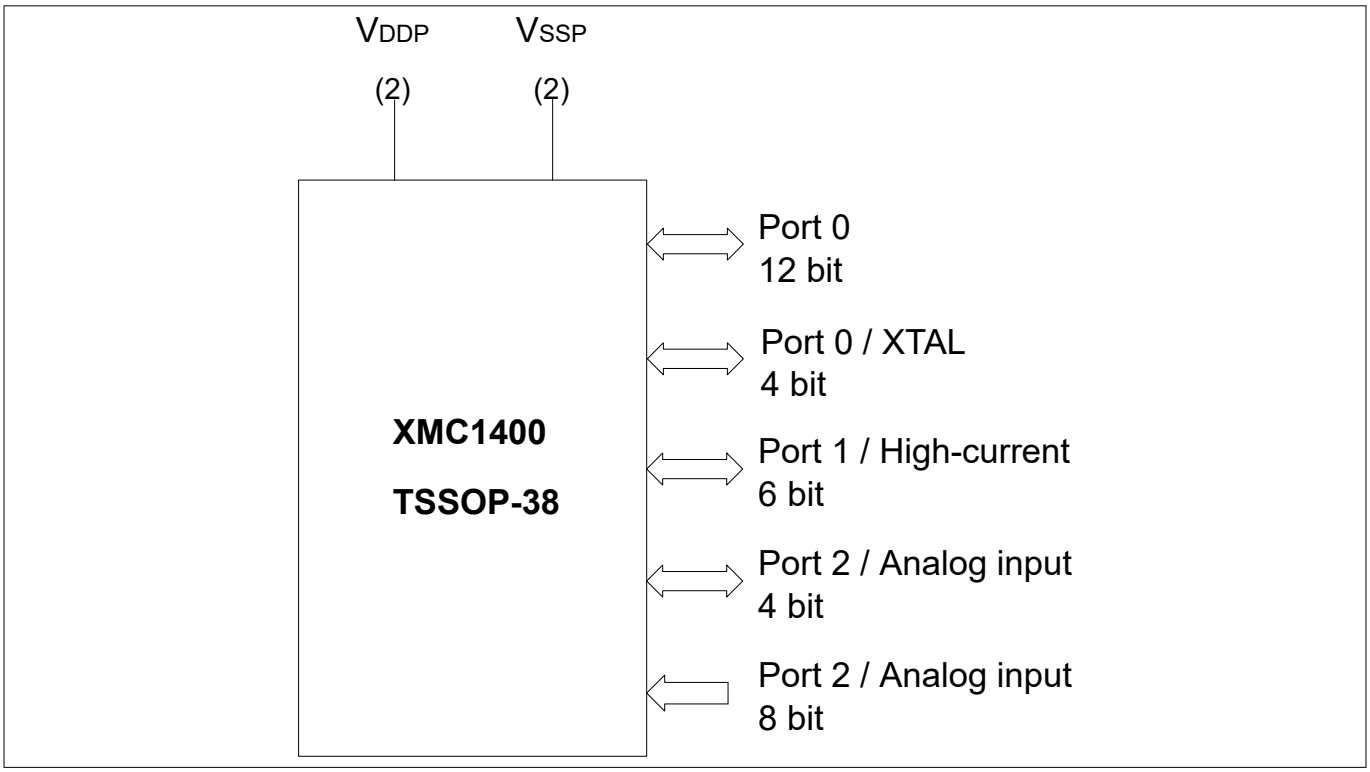

Figure 2 **XMC1400 Logic Symbol for TSSOP-38-9**

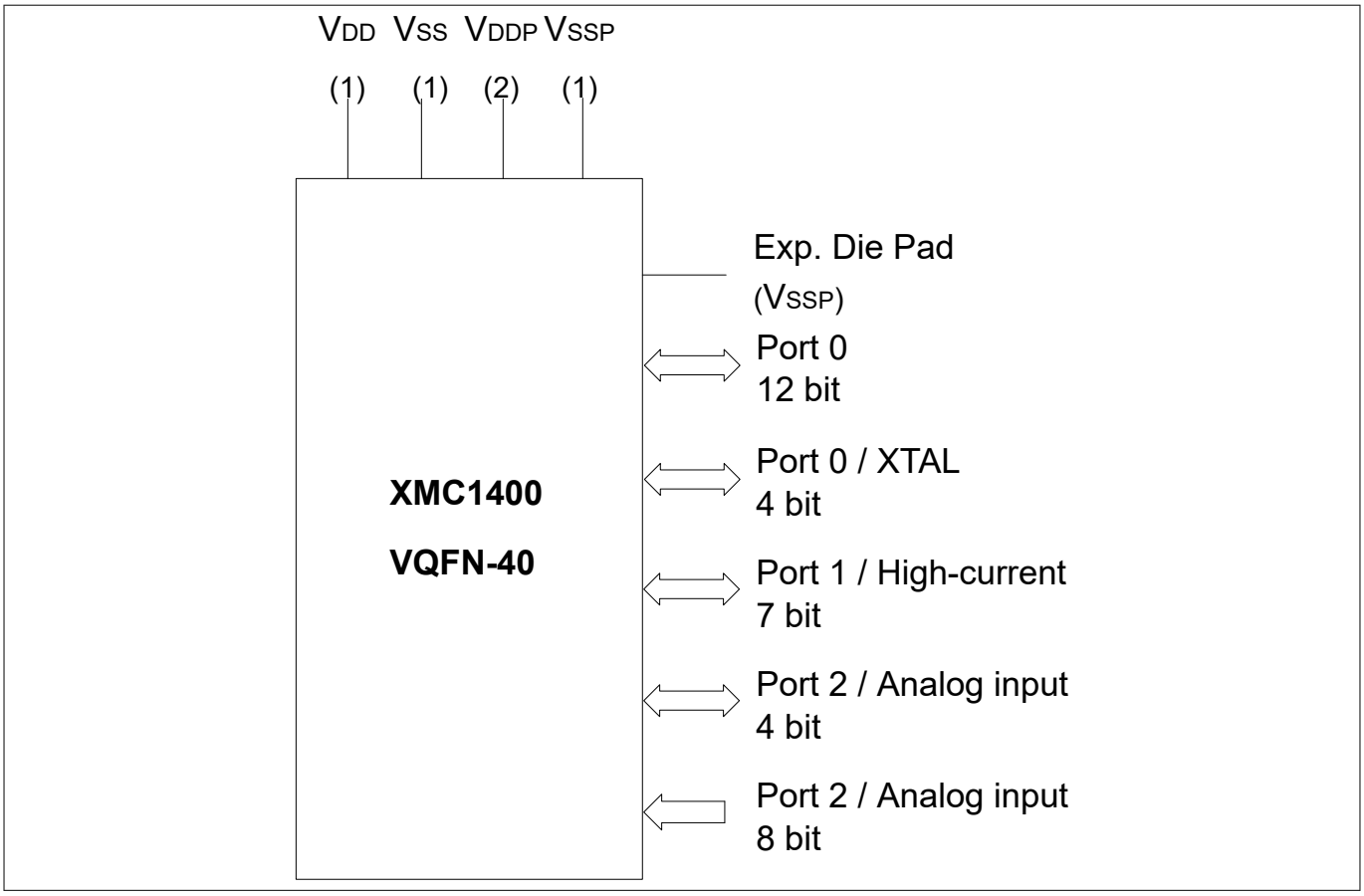

Figure 3 **XMC1400 Logic Symbol for PG-VQFN-40-17**

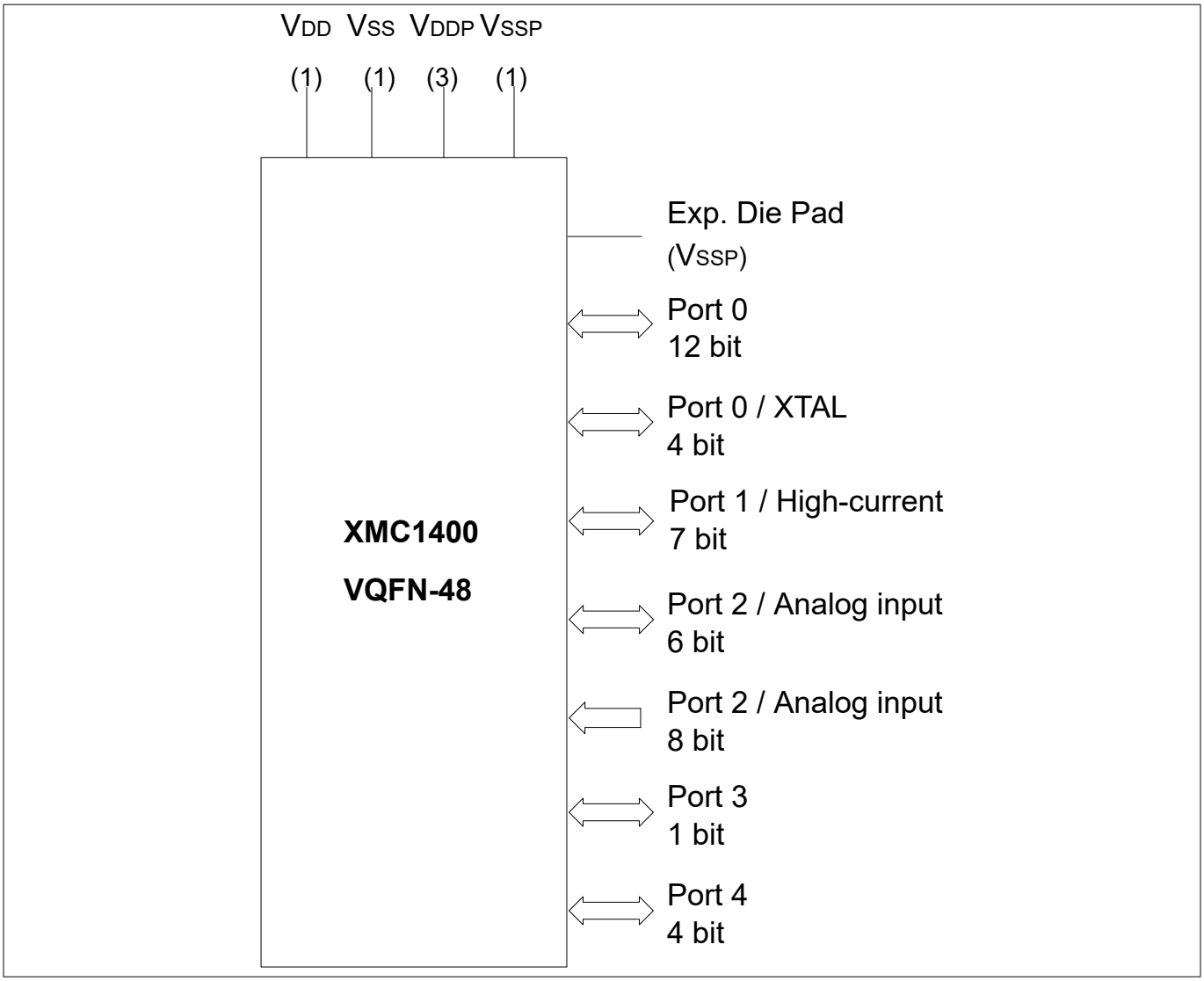

Figure 4 **XMC1400 Logic Symbol for PG-VQFN-48-73**

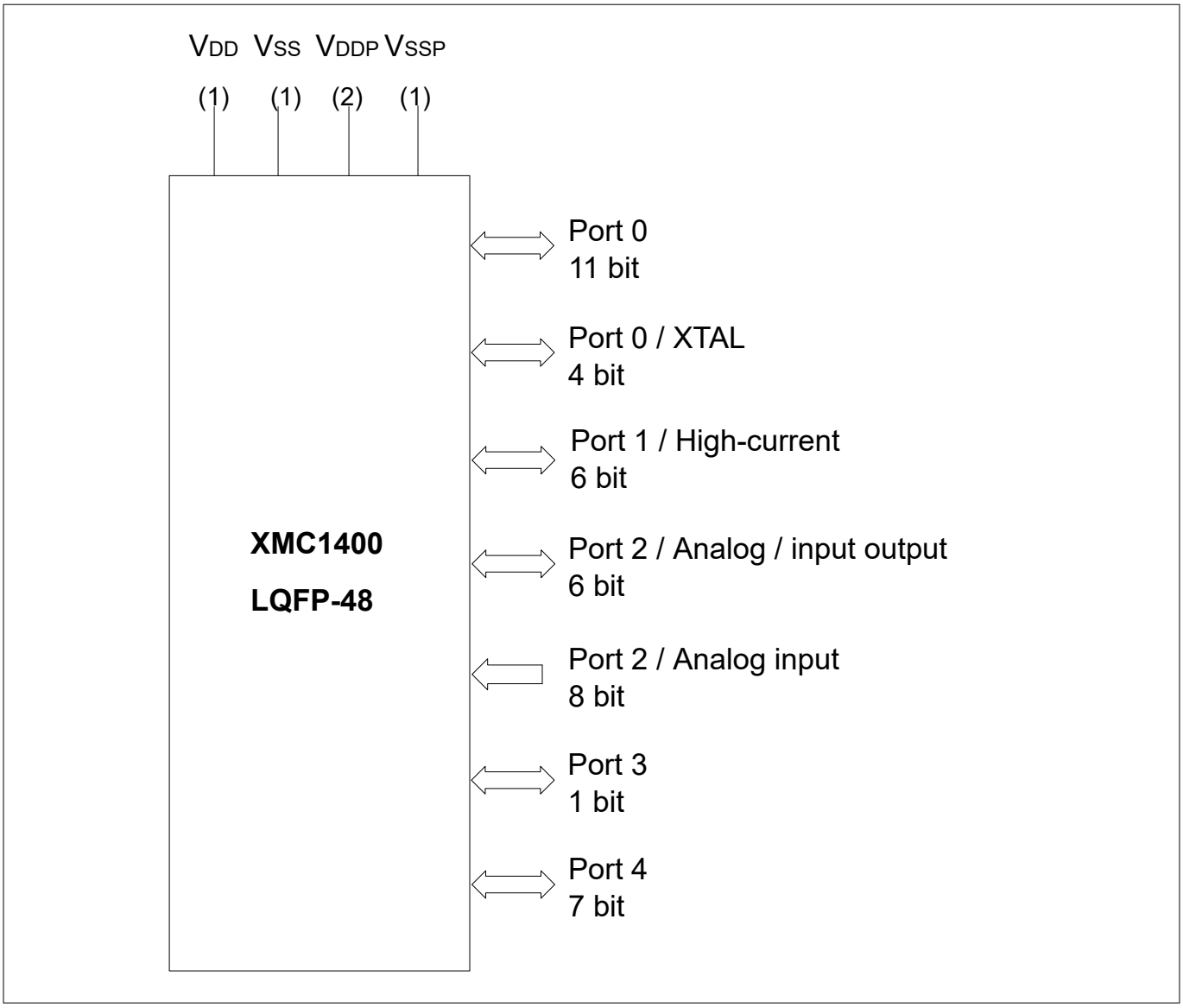

Figure 5 **XMC1400 Logic Symbol for PG-LQFP-48-10**

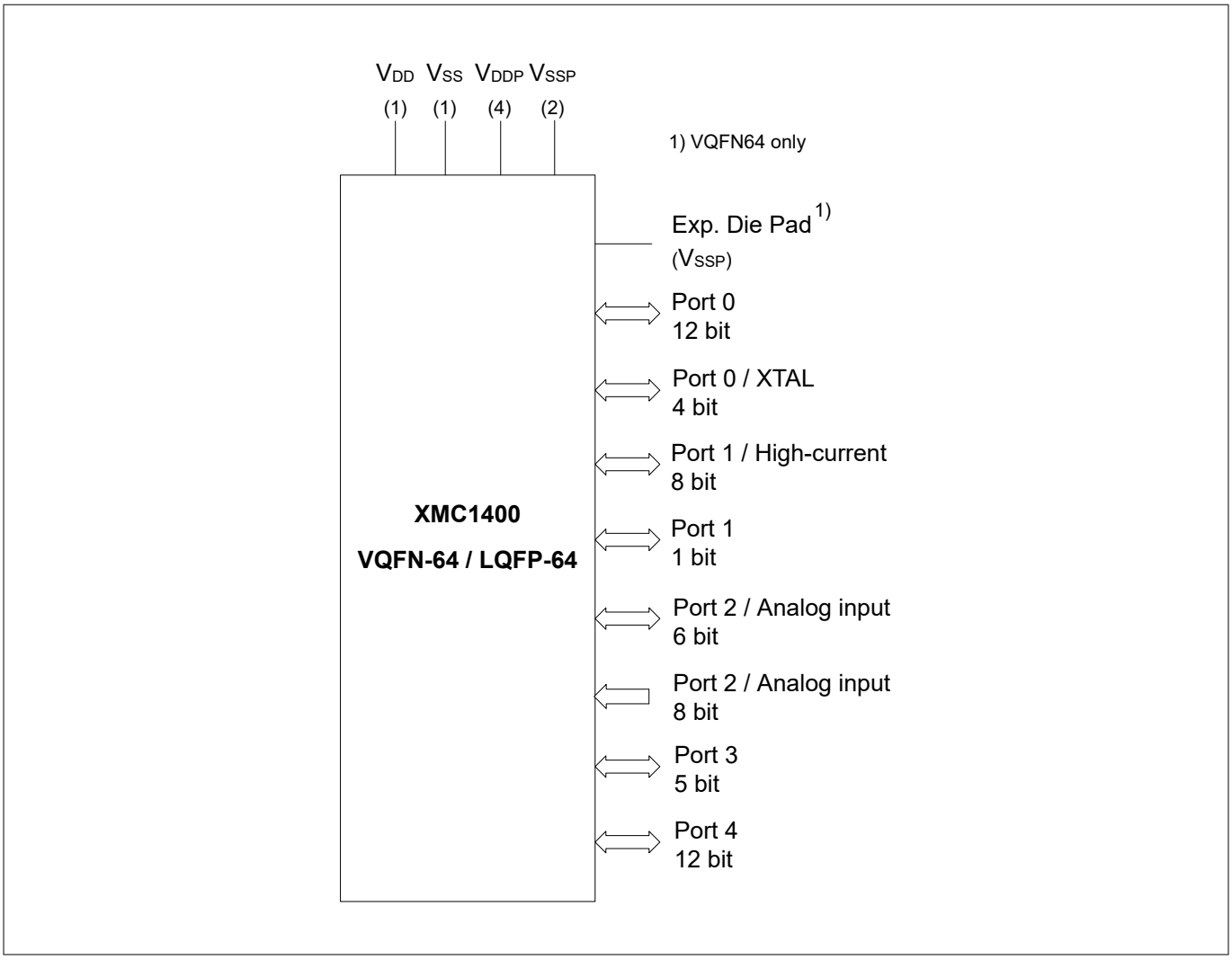

Figure 6 **XMC1400 Logic Symbol for PG-LQFP-64-26/PG-VQFN-64-6**

2.2 Pin Configuration and Definition

The following figures summarize all pins, showing their locations on the different packages.

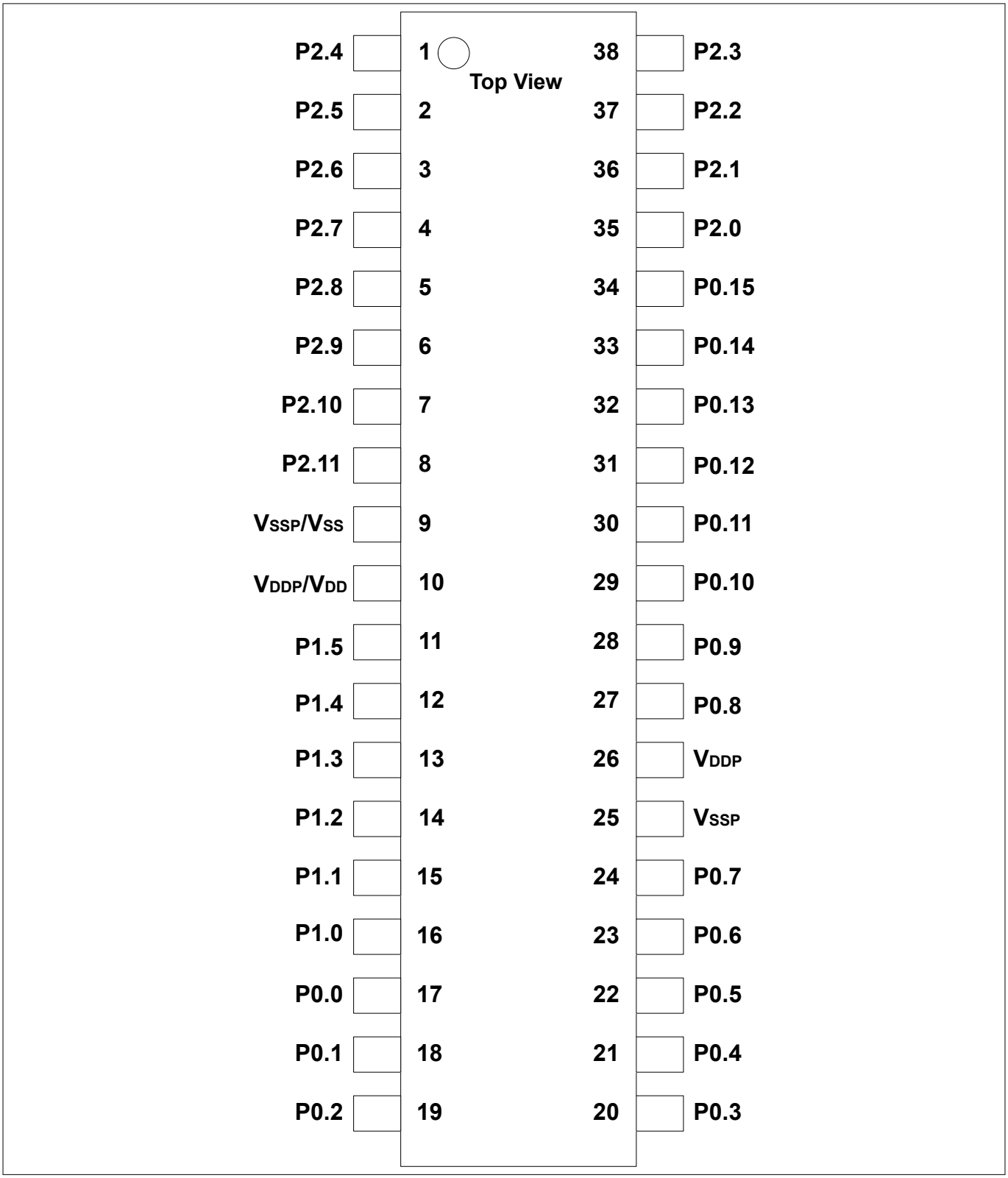

Figure 7 XMC1400 PG-TSSOP-38-9 Pin Configuration (top view)

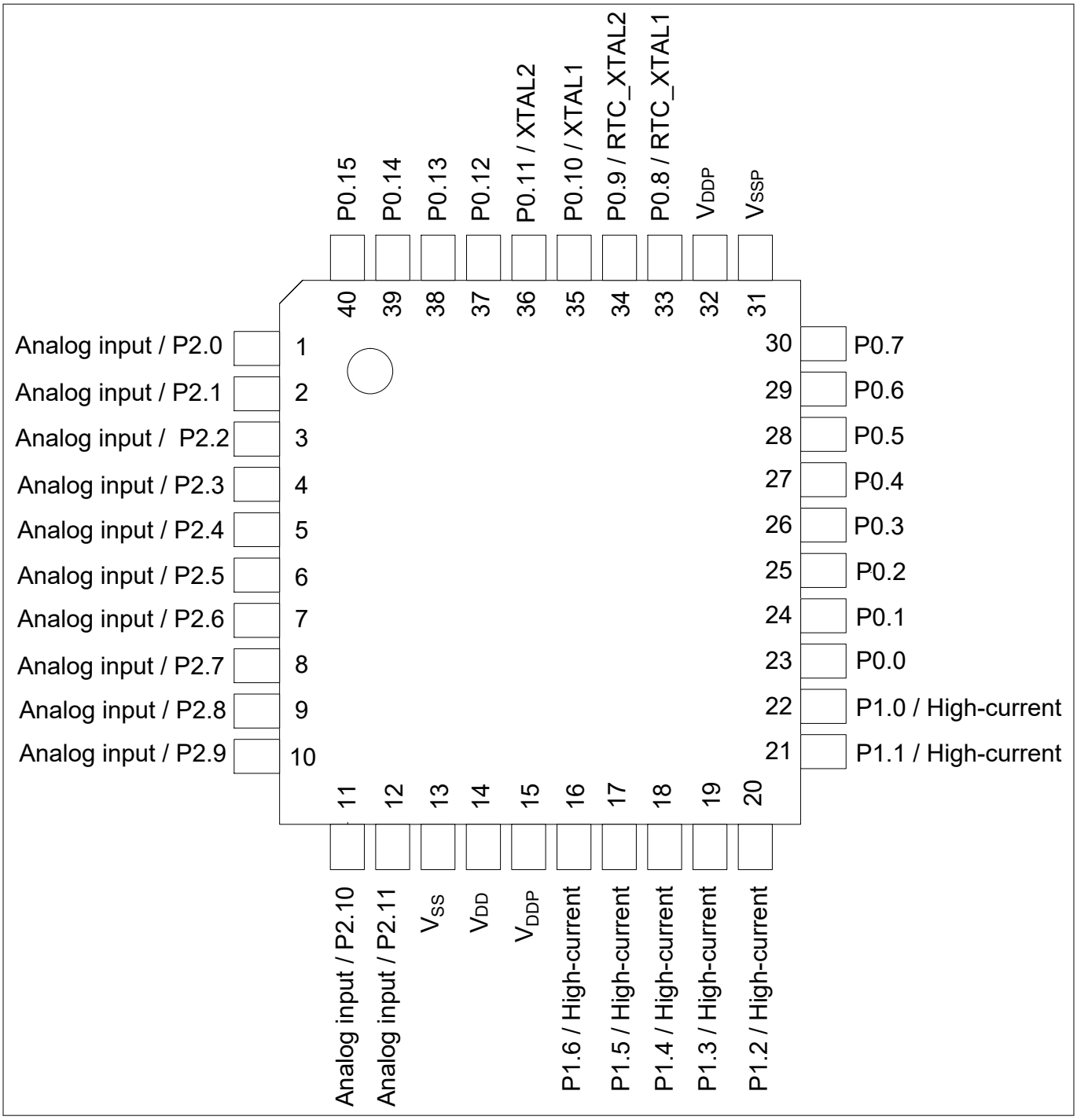

Figure 8 **XMC1400 PG-VQFN-40-17 Pin Configuration (top view)**

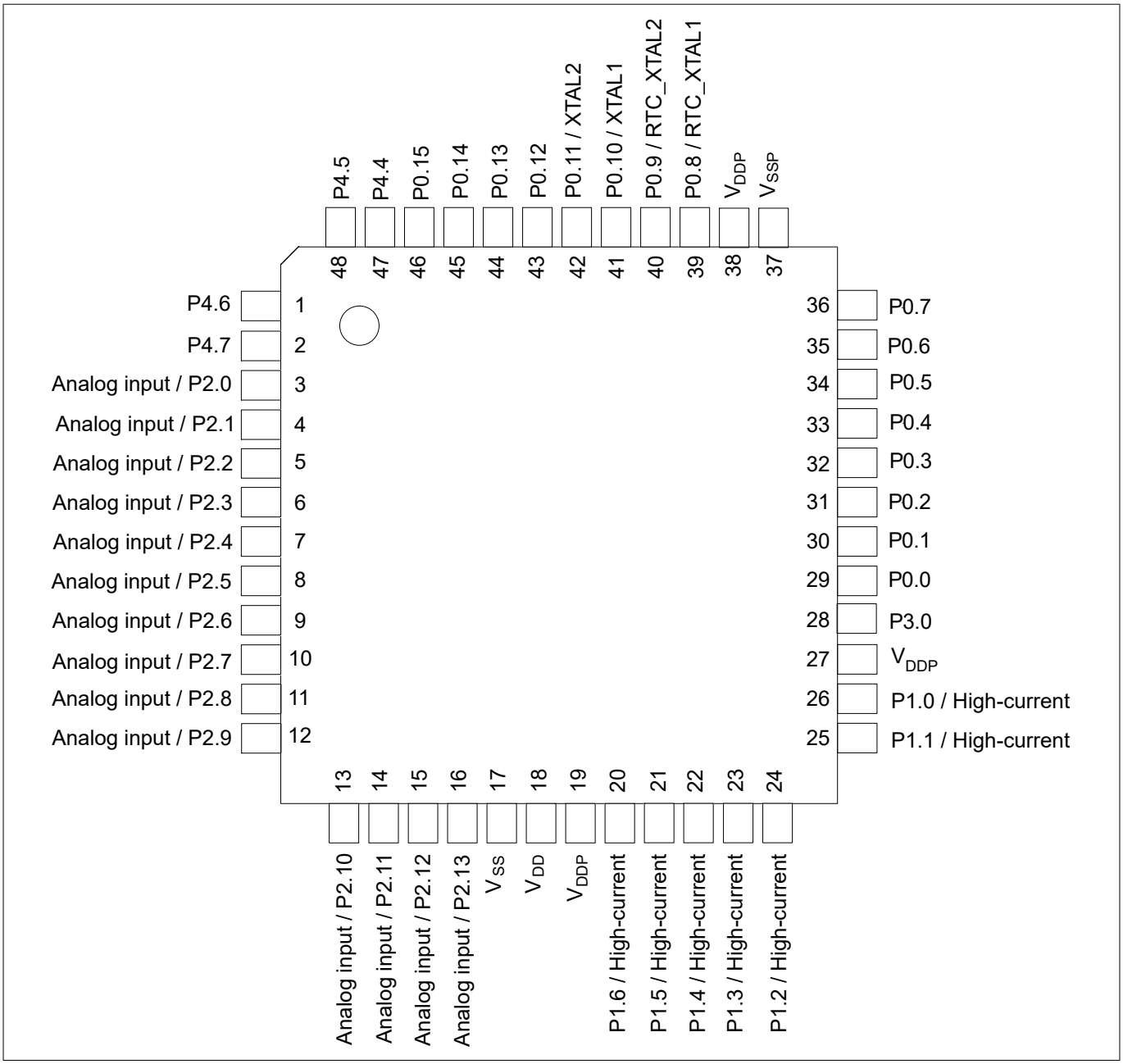

Figure 9 **XMC1400 PG-VQFN-48-73 Pin Configuration (top view)**

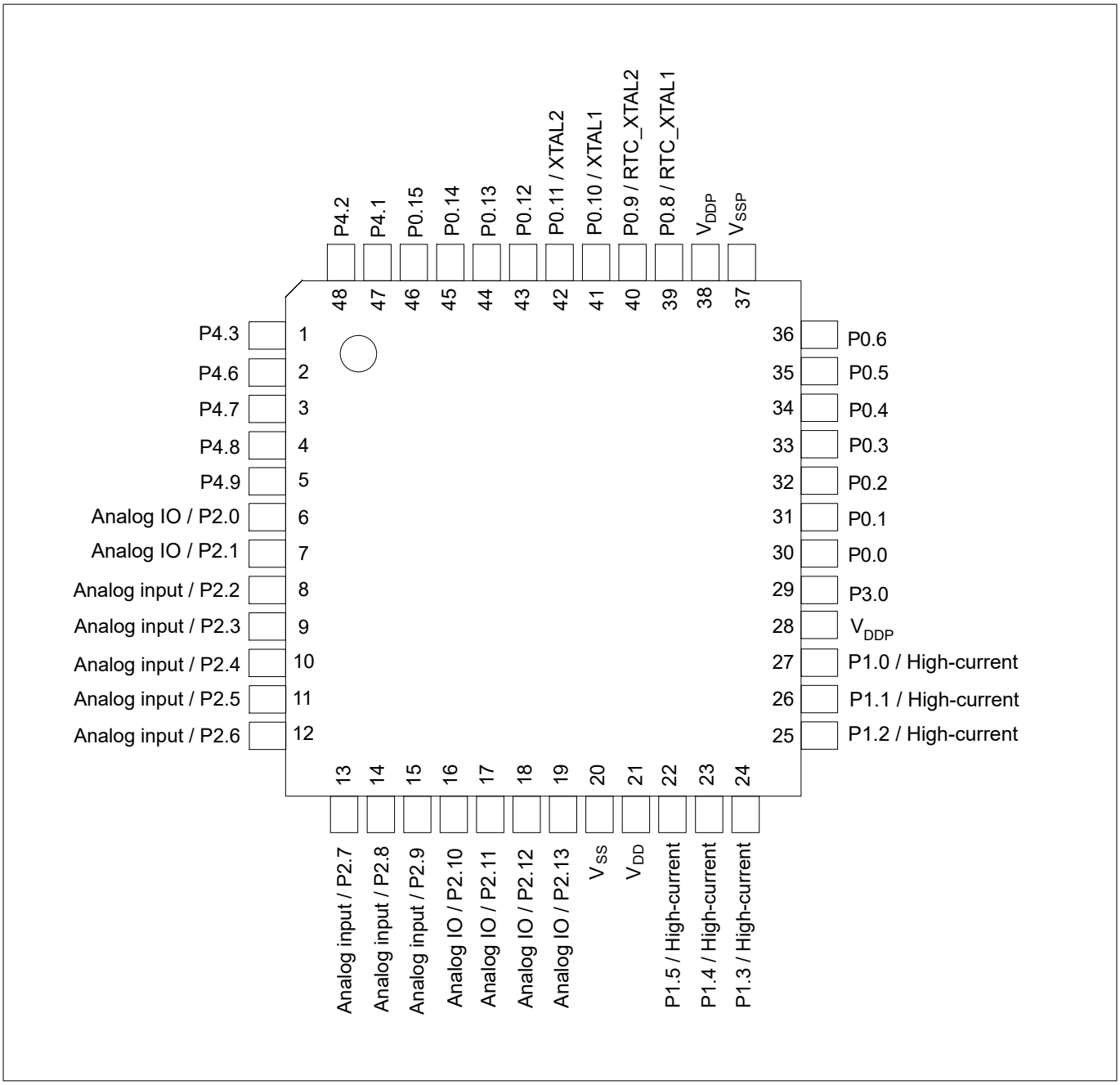

Figure 10 **XMC1400 PG-LQFP-48-10 Pin Configuration (top view)**

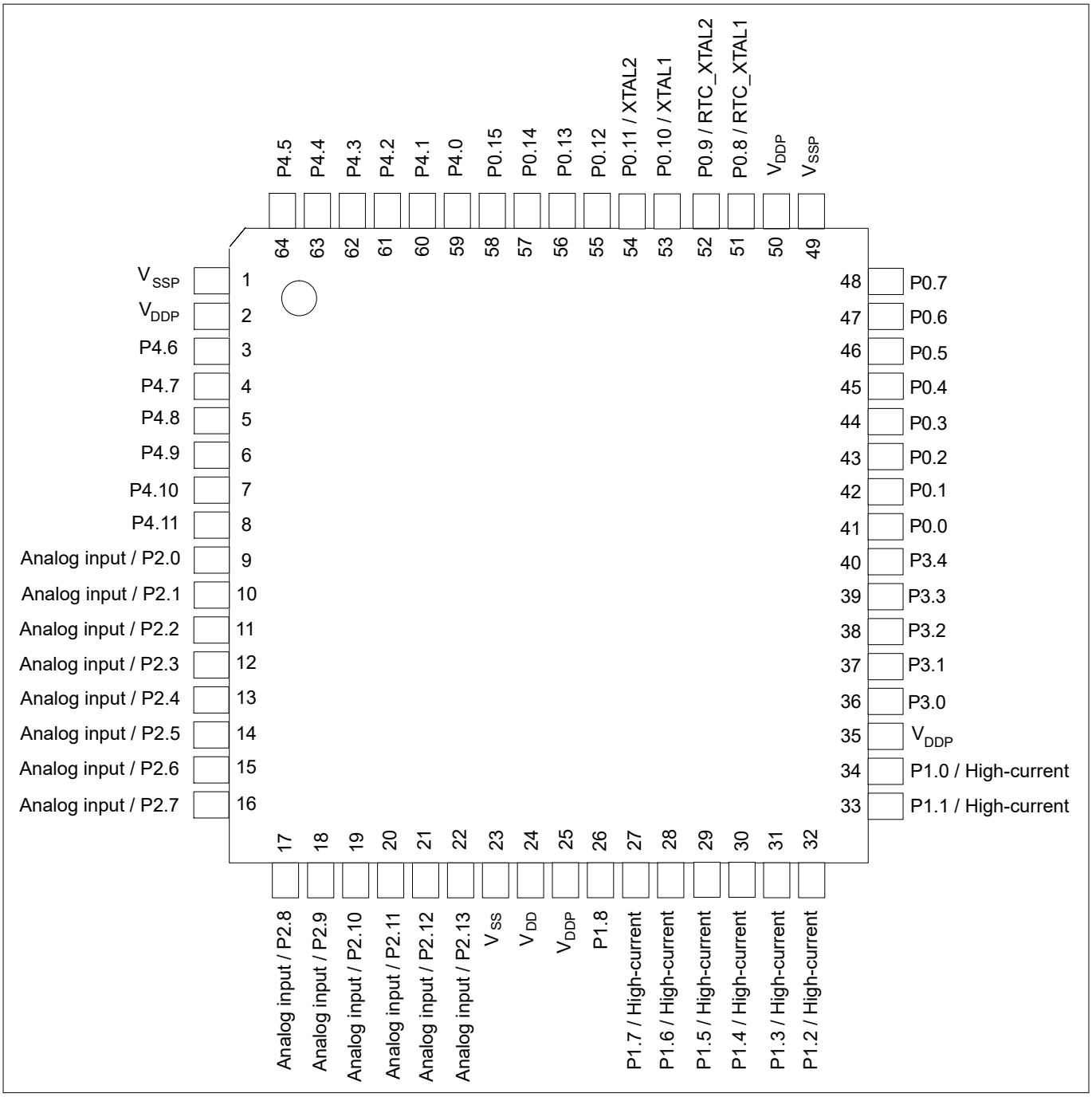

Figure 11 **XMC1400 PG-LQFP-64-26/PG-VQFN-64-6 Pin Configuration (top view)**

2.2.1 Package Pin Summary

The following general building block is used to describe each pin:

Table 4 Package Pin Mapping Description

Function	Package A	Package B	...	Pad Type
Px.y	N	N		Pad Class

The table is sorted by the “Function” column, starting with the regular Port pins (Px.y), followed by the supply pins.

The following columns, titled with the supported package variants, lists the package pin number to which the respective function is mapped in that package.

The “Pad Type” indicates the employed pad type:

- STD_INOUT(standard bi-directional pads)
- STD_INOUT/AN (standard bi-directional pads with analog input)
- STD_INOUT/clock (standard bi-directional pads with oscillator function)
- High Current (high current bi-directional pads)
- STD_IN/AN (standard input pads with analog input)
- Power (power supply)

Details about the pad properties are defined in the Electrical Parameters chapter.

Table 5 Package Pin Mapping

Function	LQFP 64, VQFN 64	LQFP 48	VQFN 48	VQFN 40	TSSOP 38	Pad Type	Notes
P0.0	41	30	29	23	17	STD_INOUT	
P0.1	42	31	30	24	18	STD_INOUT	
P0.2	43	32	31	25	19	STD_INOUT	
P0.3	44	33	32	26	20	STD_INOUT	
P0.4	45	34	33	27	21	STD_INOUT	
P0.5	46	35	34	28	22	STD_INOUT	
P0.6	47	36	35	29	23	STD_INOUT	
P0.7	48	-	36	30	24	STD_INOUT	
P0.8/ RTC_ XTAL1	51	39	39	33	27	STD_INOUT/clock_IN	

(table continues...)

Table 5 (continued) Package Pin Mapping

Function	LQFP 64, VQFN 64	LQFP 48	VQFN 48	VQFN 40	TSSOP 38	Pad Type	Notes
P0.9/ RTC_ XTAL2	52	40	40	34	28	STD_INOUT/clock_O	
P0.10/ XTAL1	53	41	41	35	29	STD_INOUT/clock_IN	
P0.11/ XTAL2	54	42	42	36	30	STD_INOUT/clock_O	
P0.12	55	43	43	37	31	STD_INOUT	
P0.13	56	44	44	38	32	STD_INOUT	
P0.14	57	45	45	39	33	STD_INOUT	
P0.15	58	46	46	40	34	STD_INOUT	
P1.0	34	27	26	22	16	High Current	
P1.1	33	26	25	21	15	High Current	
P1.2	32	25	24	20	14	High Current	
P1.3	31	24	23	19	13	High Current	
P1.4	30	23	22	18	12	High Current	
P1.5	29	22	21	17	11	High Current	
P1.6	28	-	20	16	–	High Current	
P1.7	27	-	–	–	–	High Current	
P1.8	26	-	–	–	–	STD_INOUT	
P2.0	9	6	3	1	35	STD_INOUT/AN	
P2.1	10	7	4	2	36	STD_INOUT/AN	
P2.2	11	8	5	3	37	STD_IN/AN	

(table continues...)

Table 5 (continued) Package Pin Mapping

Function	LQFP 64, VQFN 64	LQFP 48	VQFN 48	VQFN 40	TSSOP 38	Pad Type	Notes
P2.3	12	9	6	4	38	STD_IN/AN	
P2.4	13	10	7	5	1	STD_IN/AN	
P2.5	14	11	8	6	2	STD_IN/AN	
P2.6	15	12	9	7	3	STD_IN/AN	
P2.7	16	13	10	8	4	STD_IN/AN	
P2.8	17	14	11	9	5	STD_IN/AN	
P2.9	18	15	12	10	6	STD_IN/AN	
P2.10	19	16	13	11	7	STD_INOUT/AN	
P2.11	20	17	14	12	8	STD_INOUT/AN	
P2.12	21	18	15	–	–	STD_INOUT/AN	
P2.13	22	19	16	–	–	STD_INOUT/AN	
P3.0	36	29	28	–	–	STD_INOUT	
P3.1	37	-	–	–	–	STD_INOUT	
P3.2	38	-	–	–	–	STD_INOUT	
P3.3	39	-	–	–	–	STD_INOUT	
P3.4	40	-	–	–	–	STD_INOUT	
P4.0	59	-	–	–	–	STD_INOUT	
P4.1	60	47	–	–	–	STD_INOUT	
P4.2	61	48	–	–	–	STD_INOUT	
P4.3	62	1	–	–	–	STD_INOUT	
P4.4	63	-	47	–	–	STD_INOUT	
P4.5	64	-	48	–	–	STD_INOUT	

(table continues...)

Table 5 (continued) Package Pin Mapping

Function	LQFP 64, VQFN 64	LQFP 48	VQFN 48	VQFN 40	TSSOP 38	Pad Type	Notes
P4.6	3	2	1	–	–	STD_INOUT	
P4.7	4	3	2	–	–	STD_INOUT	
P4.8	5	4	–	–	–	STD_INOUT	
P4.9	6	5	–	–	–	STD_INOUT	
P4.10	7	-	–	–	–	STD_INOUT	
P4.11	8	-	–	–	–	STD_INOUT	
VSS	23	20	17	13	9	Power	Supply GND, ADC reference GND
VDD	24	21	18	14	10	Power	Supply VDD, ADC reference voltage/ORC reference voltage
VDDP	25	28	19	15	10	Power	When VDD is supplied, VDDP has to be supplied with the same voltage.
VDDP	2	-	–	–	–	Power	I/O port supply
VDDP	35	-	27	–	–	Power	I/O port supply
VDDP	50	38	38	32	26	Power	I/O port supply
VSSP	1	-	–	–	–	Power	I/O port ground
VSSP	49	37	37	31	25	Power	I/O port ground
VSSP	Exp. Pad (in VQFN 64 only)	-	Exp. Pad	Exp. Pad	–	Power	**Exposed Die Pad** The exposed die pad is connected internally to VSSP. For proper operation, it is mandatory to connect the exposed pad to the board ground. For thermal aspects, please refer to the Package and Reliability chapter.

2.2.2 Port Pin for Boot Modes

Port functions can be overruled by the boot mode selected. The type of boot mode is selected via BMI. Table 6 shows the port pins used for the various boot modes.

Table 6 Port Pin for Boot Modes

Pin	Boot	Boot Description
P0.13	CS(O)	SSC BSL mode
P0.14	SWDIO_0	Debug mode (SWD)
	SPD_0	Debug mode (SPD)
	RX/TX	ASC BSL half-duplex mode
	RX	ASC BSL full-duplex mode
	RX	CAN BSL mode
	SCLK(O)	SSC BSL mode
P0.15	SWDCLK_0	Debug mode (SWD)
	TX	ASC BSL full-duplex mode
	TX	CAN BSL mode
	DATA(I/O)	SSC BSL mode
P1.2	SWDCLK_1	Debug mode (SWD)
	TX	ASC BSL full-duplex mode
	TX	CAN BSL mode
P1.3	SWDIO_1	Debug mode (SWD)
	SPD_1	Debug mode (SPD)
	RX/TX	ASC BSL half-duplex mode
	RX	ASC BSL full-duplex mode
	RX	CAN BSL mode
P4.6	HWCON0	Boot Pins (Boot from pins mode must be selected)
P4.7	HWCON1	

2.2.3 Port I/O Function Description

The following general building block is used to describe the I/O functions of each PORT pin:

Table 7 Port I/O Function Description

Function	Outputs		Inputs	
	ALT1	ALTn	Input	Input
P0.0		MODA.OUT	MODC.INA	
Pn.y	MODA.OUT		MODA.INA	MODC.INB

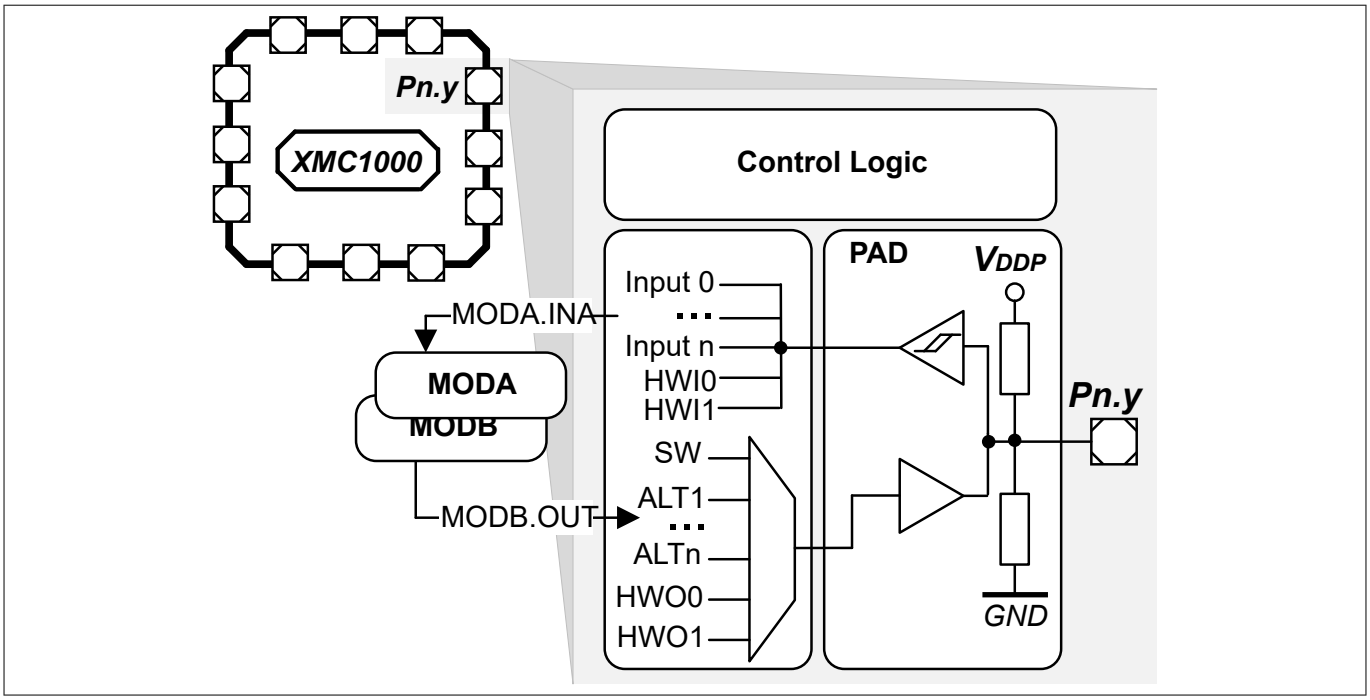

Figure 12 Simplified Port Structure

Pn.y is the port pin name, defining the control and data bits/registers associated with it. As GPIO, the port is under software control. Its input value is read via Pn_IN.y, Pn_OUT defines the output value.

Up to nine alternate output functions (ALT1 to ALT9) can be mapped to a single port pin, selected by Pn_IOCR.PC. The output value is directly driven by the respective module, with the pin characteristics controlled by the port registers (within the limits of the connected pad).

The port pin input can be connected to multiple peripherals. Most peripherals have an input multiplexer to select between different possible input sources.

The input path is also active while the pin is configured as output. This allows to feedback an output to on-chip resources without wasting an additional external pin.

Please refer to Table 9 for the complete Port I/O function mapping.

2.2.4 Hardware Controlled I/O Function Description

The following general building block is used to describe the hardware I/O and pull control functions of each PORT pin:

Table 8 Hardware Controlled I/O Function Description

Function	Outputs	Inputs	Pull Control	
	HWO0	HWI0	HW0_PD	HW0_PU
P0.0	MODB.OUT	MODB.INA		
Pn.y			$\overline{\text{MODC.OUT}}$	MODC.OUT

By Pn_HWSEL, it is possible to select between different hardware “masters” (HWO0/HWI0, HWO1/HWI1). The selected peripheral can take control of the pin(s). Hardware control overrules settings in the respective port pin registers. Additional hardware signals HW0_PD/HW1_PD and HW0_PU/HW1_PU controlled by the peripherals can be used to control the pull devices of the pin.

Please refer to Table 10 for the complete hardware I/O and pull control function mapping.

Table 9 Port I/O Functions

Function	Outputs									Inputs											
	ALT1	ALT2	ALT3	ALT4	ALT5	ALT6	ALT7	ALT8	ALT9	Input	Input	Input	Input	Input	Input	Input	Input	Input	Input	Input	Input
P0.0	ERU0.PDOUT0	LEDTS0.LINE7	ERU0.GOUT0	CCU40.OUT0	CCU80.OUT00	USIC0_CH0.SELO0	USIC0_CH1.SELO0	CCU81.OUT00	USIC1_CH1.DOUT0	BCCU0.TRAPIN B	CCU40.IN0AC					USIC1_CH1.DX0A	USIC0_CH0.DX2A		USIC0_CH1.DX2A		
P0.1	ERU0.PDOUT1	LEDTS0.LINE6	ERU0.GOUT1	CCU40.OUT1	CCU80.OUT01	BCCU0.OUT8	SCU.VDROP	USIC1_CH1.SCLKOUT	USIC1_CH1.DOUT0		CCU40.IN1AC					USIC1_CH1.DX0B	USIC1_CH1.DX1A				
P0.2	ERU0.PDOUT2	LEDTS0.LINE5	ERU0.GOUT2	CCU40.OUT2	CCU80.OUT02	VADC0.EMUX02	CCU80.OUT10	USIC1_CH0.SCLKOUT	USIC1_CH0.DOUT0		CCU40.IN2AC					USIC1_CH0.DX0A	USIC1_CH0.DX1A				
P0.3	ERU0.PDOUT3	LEDTS0.LINE4	ERU0.GOUT3	CCU40.OUT3	CCU80.OUT03	VADC0.EMUX01	CCU80.OUT11	USIC1_CH1.SCLKOUT	USIC1_CH0.DOUT0		CCU40.IN3AC					USIC1_CH0.DX0B					

(table continues...)

Table 9 (continued) Port I/O Functions

Function	Outputs									Inputs											
	ALT1	ALT2	ALT3	ALT4	ALT5	ALT6	ALT7	ALT8	ALT9	Input	Input	Input	Input	Input	Input	Input	Input	Input	Input	Input	Input
P0.4	BCCU0.OUT0	LEDTS0.LINE3	LEDTS0.COL3	CCU40.OUT1	CCU80.OUT13	VADC0.EMUX00	WWDT.SERVICE_OUT	USIC1_CH1.SELO0	CAN.N0_TXD			CCU41.IN0AB	CCU80.IN0AB								CAN.N0_RXDA
P0.5	BCCU0.OUT1	LEDTS0.LINE2	LEDTS0.COL2	CCU40.OUT0	CCU80.OUT12	ACMP2.OUT	CCU80.OUT01	VADC0.EMUX10_TXD	CAN.N0			CCU41.IN1AB	CCU80.IN1AB								CAN.N0_RXDB
P0.6	BCCU0.OUT2	LEDTS0.LINE1	LEDTS0.COL1	CCU40.OUT0	CCU80.OUT11	USIC0_CH1.MCLKOUT	USIC0_CH1.DOUT0	VADC0.EMUX11	CCU41.OUT0		CCU40.IN0AB	CCU41.IN2AB						USIC0_CH1.DX0C			
P0.7	BCCU0.OUT3	LEDTS0.LINE0	LEDTS0.COL0	CCU40.OUT1	CCU80.OUT10	USIC0_CH0.SCLKOUT	USIC0_CH1.DOUT0	VADC0.EMUX12	CCU41.OUT1		CCU40.IN1AB	CCU41.IN3AB					USIC0_CH0.DX1C	USIC0_CH1.DX0D	USIC0_CH1.DX1C		

(table continues...)

Table 9 (continued) Port I/O Functions

Function	Outputs									Inputs											
	ALT1	ALT2	ALT3	ALT4	ALT5	ALT6	ALT7	ALT8	ALT9	Input	Input	Input	Input	Input	Input	Input	Input	Input	Input	Input	Input
P0.8/ RTC_XTAL1	BCCU0.OUT4	LEDTS1.LINE0	LEDTS0.COLA	CCU40.OUT2	CCU80.OUT20	USIC0_CH0.SCLKOUT	USIC0_CH1.SCLKOUT	CCU81.OUT20	CCU41.OUT2		CCU40.IN2AB						USIC0_CH0.DX1B		USIC0_CH1.DX1B		
P0.9/ RTC_XTAL2	BCCU0.OUT5	LEDTS1.LINE1	LEDTS0.COL6	CCU40.OUT3	CCU80.OUT21	USIC0_CH0.SELO0	USIC0_CH1.SELO0	CCU81.OUT21	CCU41.OUT3		CCU40.IN3AB						USIC0_CH0.DX2B		USIC0_CH1.DX2B		
P0.10/ XTAL1	BCCU0.OUT6	LEDTS1.LINE2	LEDTS0.COL5	ACMP0.OUT	CCU80.OUT22	USIC0_CH0.SELO1	USIC0_CH1.SELO1	CCU81.OUT22					CCU80.IN2AB	CCU81.IN2AB			USIC0_CH0.DX2C		USIC0_CH1.DX2C		
P0.11/ XTAL2	BCCU0.OUT7	LEDTS1.LINE3	LEDTS0.COL4	USIC0_CH0.MCLKOUT	CCU80.OUT23	USIC0_CH0.SELO2	USIC0_CH1.SELO2	CCU81.OUT23									USIC0_CH0.DX2D		USIC0_CH1.DX2D		
P0.12	BCCU0.OUT6	LEDTS1.LINE4	LEDTS0.COL3	LEDTS1.COL3	CCU80.OUT33	USIC0_CH0.SELO3	CCU80.OUT20		CAN.N1_TXD	BCCU0.TRAPIN A	CCU40.IN0AA	CCU40.IN1AA	CCU40.IN2AA	CCU81.IN0AU	CCU40.IN3AA	CCU80.IN0AA	USIC0_CH0.DX2E	CCU80.IN1AA	CCU80.IN2AA	CAN.N1_RXDA	CCU80.IN3AA

(table continues...)

Table 9 (continued) Port I/O Functions

Function	Outputs									Inputs											
	ALT1	ALT2	ALT3	ALT4	ALT5	ALT6	ALT7	ALT8	ALT9	Input	Input	Input	Input	Input	Input	Input	Input	Input	Input	Input	Input
P0.13	WWDT.SERVICE_OUT	LEDTS1.LINE5	LEDTS0.COL2	LEDTS1.COL2	CCU80.OUT32	USIC0_CH0.SELO4	CCU80.OUT21		CAN.N1_TXD				CCU80.IN3AB	CCU81.IN1AU	POSIF0.IN0B		USIC0_CH0.DX2F				CAN.N1_RXDB
P0.14	BCCU0.OUT7	LEDTS1.LINE6	LEDTS0.COL1	LEDTS1.COL1	CCU80.OUT31	USIC0_CH0.DOUT0	USIC0_CH0.SCLKOUT		CAN.N0_TXD					CCU81.IN2AU	POSIF0.IN1B	USIC0_CH0.DX0A	USIC0_CH0.DX1A	USIC1_CH1.DX5B			CAN.N0_RXDC
P0.15	BCCU0.OUT8	LEDTS1.LINE7	LEDTS0.COL0	LEDTS1.COL0	CCU80.OUT30	USIC0_CH0.DOUT0	USIC0_CH1.MCLKOUT		CAN.N0_TXD					CCU81.IN3AU	POSIF0.IN2B	USIC0_CH0.DX0B		USIC1_CH1.DX3B	USIC1_CH1.DX4B		CAN.N0_RXDD
P1.0	BCCU0.OUT0	CCU40.OUT0	LEDTS0.COL0	LEDTS1.COLA	CCU80.OUT00	ACMP1.OUT	USIC0_CH0.DOUT0	CCU81.OUT00	CAN.N0_TXD						POSIF0.IN2A	USIC0_CH0.DX0C					CAN.N0_RXDG

(table continues...)

Table 9 (continued) Port I/O Functions

Function	Outputs									Inputs											
	ALT1	ALT2	ALT3	ALT4	ALT5	ALT6	ALT7	ALT8	ALT9	Input	Input	Input	Input	Input	Input	Input	Input	Input	Input	Input	Input
P1.1	ERU1.PDOUT1	CCU40.OUT1	LEDTS0.COL1	LEDTS1.COL0	CCU80.OUT01	USIC0_CH0.DOUT0	USIC0_CH1.SELO0	CCU81.OUT01	CAN.N0_TXD						POSIF0.IN1A	USIC0_CH0.DX0D	USIC0_CH0.DX1D		USIC0_CH1.DX2E	CAN.N0_RXDH	
P1.2	ERU1.PDOUT2	CCU40.OUT2	LEDTS0.COL2	LEDTS1.COL1	CCU80.OUT10	ACMP2.OUT	USIC0_CH1.DOUT0	CCU81.OUT10	CAN.N1_TXD						POSIF0.IN0A			USIC0_CH1.DX0B		CAN.N1_RXDG	
P1.3	ERU1.PDOUT3	CCU40.OUT3	LEDTS0.COL3	LEDTS1.COL2	CCU80.OUT11	USIC0_CH1.SCLKOUT	USIC0_CH1.DOUT0	CCU81.OUT11	CAN.N1_TXD									USIC0_CH1.DX0A	USIC0_CH1.DX1A	CAN.N1_RXDH	
P1.4	ERU1.PDOUT0	USIC0_CH1.SCLKOUT	LEDTS0.COL4	LEDTS1.COL3	CCU80.OUT20	USIC0_CH0.SELO0	USIC0_CH1.SELO1	CCU81.OUT20	CCU41.OUT0							USIC0_CH0.DX5E		USIC0_CH1.DX5E			
P1.5	ERU1.PDOUT1	USIC0_CH0.DOUT0	LEDTS0.COLA	BCCU0.OUT1	CCU80.OUT21	USIC0_CH0.SELO1	USIC0_CH1.SELO2	CCU81.OUT21	CCU41.OUT1									USIC0_CH1.DX5F			

(table continues...)

Table 9 (continued) Port I/O Functions

Function	Outputs									Inputs											
	ALT1	ALT2	ALT3	ALT4	ALT5	ALT6	ALT7	ALT8	ALT9	Input	Input	Input	Input	Input	Input	Input	Input	Input	Input	Input	Input
P1.6	ERU1.PDOUT2	USIC0_CH1.DOUT0	LEDTS0.COL5	USIC0_CH0.SCLKOUT	BCCU0.OUT2	USIC0_CH0.SELO2	USIC0_CH1.SELO3	CCU81.OUT30	CCU41.OUT2						POSIF1.IN2A	USIC0_CH0.DX5F					
P1.7	BCCU0.OUT8	CCU40.OUT3	LEDTS0.COL6	LEDTS1.COL4		ACMP3.OUT	ERU1.PDOUT3	CCU81.OUT31	CCU41.OUT3						POSIF1.IN1A	USIC1_CH0.DX5B			USIC1_CH1.DX2C		
P1.8	BCCU0.OUT0	CCU40.OUT0	USIC1_CH1.SCLKOUT	VADC0.EMUX02		ACMP1.OUT	ERU1.PDOUT0	CCU81.OUT32							POSIF1.IN0A	USIC1_CH0.DX3B	USIC1_CH0.DX4B		USIC1_CH1.DX1C		
P2.0	ERU0.PDOUT3	CCU40.OUT0	ERU0.GOUT3	LEDTS1.COL5	CCU80.OUT20	USIC0_CH0.DOUT0	USIC0_CH0.SCLKOUT	CCU81.OUT20	CAN.N0_TXD		VADC0.G0CH5					USIC0_CH0.DX0E	USIC0_CH0.DX1E		USIC0_CH1.DX2F	CAN.N0_RXDE	ERU0.0 B0

(table continues...)

Table 9 (continued) Port I/O Functions

Function	Outputs									Inputs											
	ALT1	ALT2	ALT3	ALT4	ALT5	ALT6	ALT7	ALT8	ALT9	Input	Input	Input	Input	Input	Input	Input	Input	Input	Input	Input	Input
P2.1	ERU0.PDOUT2	CCU40.OUT1	ERU0.GOUT2	LEDTS1.COL6	CCU80.OUT21	USIC0_CH0.DOUT0	USIC0_CH1.SCLKOUT	CCU81.OUT21	CAN.N0_TXD	ACMP2.INP	VADC0.G0CH6					USIC0_CH0.DX0F		USIC0_CH1.DX3A	USIC0_CH1.DX4A	CAN.N0_RXDF	ERU0.1B0
P2.2										ACMP2.INN	VADC0.G0CH7		ORC0.AIN	USIC1_CH0.DX5E		USIC0_CH0.DX3A	USIC0_CH0.DX4A	USIC0_CH1.DX5A			ERU0.0B1
P2.3												VADC0.G1CH5	ORC1.AIN	USIC1_CH0.DX3E	USIC1_CH0.DX4E	USIC1_CH1.DX5C	USIC0_CH0.DX5B	USIC0_CH1.DX3C	USIC0_CH1.DX4C		ERU0.1B1
P2.4												VADC0.G1CH6	ORC2.AIN	USIC1_CH1.DX3C	USIC1_CH1.DX4C	USIC0_CH0.DX3B	USIC0_CH0.DX4B	USIC1_CH0.DX5F	USIC0_CH1.DX5B		ERU0.0A1
P2.5												VADC0.G1CH7	ORC3.AIN	USIC1_CH1.DX5D		USIC0_CH0.DX5D		USIC0_CH1.DX3E	USIC0_CH1.DX4E		ERU0.1A1

(table continues...)

Table 9 (continued) Port I/O Functions

Function	Outputs									Inputs											
	ALT1	ALT2	ALT3	ALT4	ALT5	ALT6	ALT7	ALT8	ALT9	Input	Input	Input	Input	Input	Input	Input	Input	Input	Input	Input	Input
P2.6										ACMP1.INN	VADC0.G0CH0		ORC4.AIN	USIC1_CH1.DX3E	USIC1_CH1.DX4E	USIC0_CH0.DX3E	USIC0_CH0.DX4E	USIC0_CH1.DX5D			ERU0.2A1
P2.7										ACMP1.INP		VADC0.G1CH1	ORC5.AIN	USIC1_CH1.DX5E		USIC0_CH0.DX5C		USIC0_CH1.DX3D	USIC0_CH1.DX4D		ERU0.3A1
P2.8										ACMP0.INN	VADC0.G0CH1	VADC0.G1CH0	ORC6.AIN			USIC0_CH0.DX3D	USIC0_CH0.DX4D	USIC0_CH1.DX5C			ERU0.3B1
P2.9										ACMP0.INP	VADC0.G0CH2	VADC0.G1CH4	ORC7.AIN			USIC0_CH0.DX5A		USIC0_CH1.DX3B	USIC0_CH1.DX4B		ERU0.3B0
P2.10	ERU0.PDOUT1	CCU40.OUT2	ERU0.GOUT1	LEDTS1.COL4	CCU80.OUT30	ACMP0.OUT	USIC0_CH1.DOUT0		CAN.N1_TXD		VADC0.G0CH3	VADC0.G1CH2				USIC0_CH0.DX3C	USIC0_CH0.DX4C	USIC0_CH1.DX0F		CAN.N1_RXDE	ERU0.2B0

(table continues...)

Table 9 (continued) Port I/O Functions

Function	Outputs									Inputs											
	ALT1	ALT2	ALT3	ALT4	ALT5	ALT6	ALT7	ALT8	ALT9	Input	Input	Input	Input	Input	Input	Input	Input	Input	Input	Input	Input
P2.11	ERU0.PDOUT0	CCU40.OUT3	ERU0.GOUT0	LEDTS1.COL3	CCU80.OUT31	USIC0_CH1.SCLKOUT	USIC0_CH1.DOUT0		CAN.N1_TXD	ACMP.REF	VADC0.G0CH4	VADC0.G1CH3						USIC0_CH1.DX0E	USIC0_CH1.DX1E	CAN.N1_RXDF	ERU0.2 B1
P2.12	BCCU0.OUT3	VADC0.EMUX00CH0.SC	USIC1_LKOUT	USIC1_CH1.SCLKOUT		ACMP2.OUT	USIC1_CH1.DOUT0	LEDTS2.COL6		ACMP3.INN						USIC1_CH0.DX3A	USIC1_CH0.DX4A	USIC1_CH1.DX0C	USIC1_CH1.DX1B		ERU1.3 A2
P2.13	BCCU0.OUT4	CCU40.OUT3	USIC1_CH0.MCLKOUT	CCU81.OUT31		VADC0.EMUX01	USIC1_CH1.DOUT0	CCU81.OUT33	CCU41.OUT3	ACMP3.INP						USIC1_CH0.DX5A		USIC1_CH1.DX0D			ERU1.3 A3
P3.0	BCCU0.OUT0	USIC1_CH1.DOUT0	USIC1_CH1.SCLKOUT	LEDTS2.COLA	CCU80.OUT21	ACMP1.OUT	USIC1_CH0.SELO1	CCU81.OUT21	CCU41.OUT0	BCCU0.TRAPIN C	CCU41.IN0AA	CCU41.IN1AA	CCU41.IN2AA	CCU41.IN3AA	CCU81.IN0AA	CCU81.IN1AA	CCU81.IN2A A	USIC1_CH1.DX0E	USIC1_CH1.DX1D	CCU81.IN3AA	ERU1.0 A1

(table continues...)

Table 9 (continued) Port I/O Functions

Function	Outputs									Inputs											
	ALT1	ALT2	ALT3	ALT4	ALT5	ALT6	ALT7	ALT8	ALT9	Input	Input	Input	Input	Input	Input	Input	Input	Input	Input	Input	Input
P3.1	BCCU0.OUT1	USIC1_CH1.DOUT0		LEDTS2.COL0	CCU80.OUT20	ACMP3.OUT	USIC1_CH0.SELO0	CCU81.OUT20	CCU41.OUT1								USIC1_CH0.DX2F	USIC1_CH1.DX0F			ERU1.1A1
P3.2	BCCU0.OUT2	USIC1_CH1.SCLKOUT		LEDTS2.COL1	CCU80.OUT11	ACMP2.OUT	USIC1_CH0.SCLKOUT	CCU81.OUT11	CCU41.OUT2							USIC1_CH0.DX3C	USIC1_CH0.DX4C	USIC1_CH1.DX3D	USIC1_CH1.DX4D		ERU1.2A1
P3.3	BCCU0.OUT5	USIC1_CH0.DOUT0		LEDTS2.COL2	CCU80.OUT10	ACMP0.OUT	USIC1_CH1.SELO0	CCU81.OUT10	CCU41.OUT3							USIC1_CH0.DX0E			USIC1_CH1.DX2A		ERU1.1A3
P3.4	BCCU0.OUT6	USIC1_CH0.DOUT0	USIC1_CH0.SCLKOUT	LEDTS2.COL3	CCU80.OUT01	USIC1_CH1.MCLKOUT	USIC1_CH1.SELO1	CCU81.OUT01								USIC1_CH0.DX0F	USIC1_CH0.DX1E		USIC1_CH1.DX2B		ERU1.2A3
P4.0	BCCU0.OUT0	ERU1.PDOUT0	LEDTS2.COL5	ERU1.GOUT0	CCU40.OUT0	ACMP1.OUT	USIC1_CH1.SELO1	CCU81.OUT10	CCU41.OUT0		CCU40.IN0BA	CCU41.IN0AC	CCU80.IN0AU			USIC1_CH0.DX3D	USIC1_CH0.DX4D				

(table continues...)

Table 9 (continued) Port I/O Functions

Function	Outputs									Inputs											
	ALT1	ALT2	ALT3	ALT4	ALT5	ALT6	ALT7	ALT8	ALT9	Input	Input	Input	Input	Input	Input	Input	Input	Input	Input	Input	Input
P4.1	BCCU0.OUT8	ERU1.PDOUT1	LEDTS2.COL4	ERU1.GOUT1	CCU40.OUT1	ACMP3.OUT	USIC1_CH1.SELO2	CCU81.OUT11	CCU41.OUT1		CCU40.IN1BA	CCU41.IN1AC	CCU80.IN1AU		POSIF1.IN0B	USIC1_CH0.DX5C					
P4.2	BCCU0.OUT4	ERU1.PDOUT2	CCU81.OUT20	ERU1.GOUT2	CCU40.OUT2	ACMP2.OUT	USIC1_CH1.SELO3	CCU81.OUT12	CCU41.OUT2		CCU40.IN2BA	CCU41.IN2AC	CCU80.IN2AU	CCU81.IN1AB	POSIF1.IN1B	USIC1_CH0.DX5D					
P4.3	BCCU0.OUT5	ERU1.PDOUT3	CCU81.OUT21	ERU1.GOUT3	CCU40.OUT3	ACMP0.OUT	USIC1_CH0.SCLKOUT	CCU81.OUT13	CCU41.OUT3		CCU40.IN3BA	CCU41.IN3AC	CCU80.IN3AU		POSIF1.IN2B		USIC1_CH0.DX1B				
P4.4	BCCU0.OUT0	LEDTS2.LINE0		LEDTS1.COLA	CCU80.OUT00	USIC1_CH0.DOUT0		CCU81.OUT00	CCU41.OUT0			CCU41.IN0AV				USIC1_CH0.DX0C		USIC1_CH1.DX5F			ERU1.0A2
P4.5	BCCU0.OUT8	LEDTS2.LINE1		LEDTS1.COL6	CCU80.OUT01	USIC1_CH0.DOUT0	USIC1_CH0.SCLKOUT	CCU81.OUT01	CCU41.OUT1			CCU41.IN1AV				USIC1_CH0.DX0D	USIC1_CH0.DX1C				ERU1.1A2

(table continues...)

Table 9 (continued) Port I/O Functions

Function	Outputs									Inputs											
	ALT1	ALT2	ALT3	ALT4	ALT5	ALT6	ALT7	ALT8	ALT9	Input	Input	Input	Input	Input	Input	Input	Input	Input	Input	Input	Input
P4.6	BCCU0.OUT2	LEDTS2.LINE2	CCU81.OUT10	LEDTS1.COL5	CCU80.OUT10		USIC1_CH0.SCLKOUT	CCU81.OUT02	CCU41.OUT2			CCU41.IN2AV		CCU81.IN0AB			USIC1_CH0.DX1D				ERU1.2 A2
P4.7	BCCU0.OUT5	LEDTS2.LINE3	CCU81.OUT11	LEDTS1.COL4	CCU80.OUT11		USIC1_CH0.SELO0	CCU81.OUT03	CCU41.OUT3			CCU41.IN3AV					USIC1_CH0.DX2A				ERU1.0 A3
P4.8	BCCU0.OUT7	LEDTS2.LINE4	LEDTS2.COL3	LEDTS1.COL3	CCU80.OUT30	CCU40.OUT0	USIC1_CH0.SELO1	CCU81.OUT30	CAN.N1_TXD		CCU40.IN0AV	CCU41.IN0BA					USIC1_CH0.DX2B			CAN.N1_RXDC	
P4.9	BCCU0.OUT3	LEDTS2.LINE5	LEDTS2.COL2	LEDTS1.COL2	CCU80.OUT31	CCU40.OUT1	USIC1_CH0.SELO2	CCU81.OUT31	CAN.N1_TXD		CCU40.IN1AV	CCU41.IN1BA					USIC1_CH0.DX2C			CAN.N1_RXDD	
P4.10		LEDTS2.LINE6	LEDTS2.COL1	LEDTS1.COL1	CCU80.OUT00	CCU40.OUT2	USIC1_CH0.SELO3	CCU81.OUT32	CCU81.OUT00	BCCU0.TRAPIN D	CCU40.IN2AV	CCU41.IN2BA		CCU81.IN3AB			USIC1_CH0.DX2D	USIC1_CH1.DX5A			

(table continues...)

Table 9 (continued) Port I/O Functions

Function	Outputs									Inputs											
	ALT1	ALT2	ALT3	ALT4	ALT5	ALT6	ALT7	ALT8	ALT9	Input	Input	Input	Input	Input	Input	Input	Input	Input	Input	Input	Input
P4.11		LEDTS2.LINE7	LEDTS2.COL0	LEDTS1.COL0	CCU80.OUT01	CCU40.OUT3	USIC1_CH0.SELO4	CCU81.OUT33	CCU81.OUT01		CCU40.IN3AV	CCU41.IN3BA					USIC1_CH0.DX2E	USIC1_CH1.DX3A	USIC1_CH1.DX4A		

Table 10 Hardware I/O Controlled Functions

Function	Outputs	Outputs	Inputs	Inputs	Pull Control	Pull Control	Pull Control	Pull Control
	HWO0	**HWO1**	**HWI0**	**HWI1**	**HW0_PD**	**HW0_PU**	**HW1_PD**	**HW1_PU**
P0.0	LEDTS0.EXTENDED7		LEDTS0.TSIN7	LEDTS0.TSIN7	Reserved for LEDTS Scheme A: pull-down disabled always	Reserved for LEDTS Scheme A: pull-down enabled always	Reserved for LEDTS Scheme B: pull-up enabled and pull-down disabled, and vice versa	
P0.1	LEDTS0.EXTENDED6		LEDTS0.TSIN6	LEDTS0.TSIN6				
P0.2	LEDTS0.EXTENDED5		LEDTS0.TSIN5	LEDTS0.TSIN5				
P0.3	LEDTS0.EXTENDED4		LEDTS0.TSIN4	LEDTS0.TSIN4				
P0.4	LEDTS0.EXTENDED3		LEDTS0.TSIN3	LEDTS0.TSIN3				
P0.5	LEDTS0.EXTENDED2		LEDTS0.TSIN2	LEDTS0.TSIN2				
P0.6	LEDTS0.EXTENDED1		LEDTS0.TSIN1	LEDTS0.TSIN1				
P0.7	LEDTS0.EXTENDED0		LEDTS0.TSIN0	LEDTS0.TSIN0				
P0.8	LEDTS1.EXTENDED0		LEDTS1.TSIN0	LEDTS1.TSIN0				

(table continues...)

Table 10 (continued) Hardware I/O Controlled Functions

Function	Outputs	Outputs	Inputs	Inputs	Pull Control	Pull Control	Pull Control	Pull Control
	HWO0	HWO1	HWI0	HWI1	HW0_PD	HW0_PU	HW1_PD	HW1_PU
P0.9	LEDTS1.EXTENDED1		LEDTS1.TSIN1	LEDTS1.TSIN1				
P0.10	LEDTS1.EXTENDED2		LEDTS1.TSIN2	LEDTS1.TSIN2				
P0.11	LEDTS1.EXTENDED3		LEDTS1.TSIN3	LEDTS1.TSIN3				
P0.12	LEDTS1.EXTENDED4		LEDTS1.TSIN4	LEDTS1.TSIN4				
P0.13	LEDTS1.EXTENDED5		LEDTS1.TSIN5	LEDTS1.TSIN5				
P0.14	LEDTS1.EXTENDED6		LEDTS1.TSIN6	LEDTS1.TSIN6				
P0.15	LEDTS1.EXTENDED7		LEDTS1.TSIN7	LEDTS1.TSIN7				
P1.0		USIC0_CH0.DOUT0		USIC0_CH0.HWIN0	$\overline{\text{BCCU0.OUT2}}$	BCCU0.OUT2		
P1.1		USIC0_CH0.DOUT1		USIC0_CH0.HWIN1	$\overline{\text{BCCU0.OUT3}}$	BCCU0.OUT3		
P1.2		USIC0_CH0.DOUT2		USIC0_CH0.HWIN2	$\overline{\text{BCCU0.OUT4}}$	BCCU0.OUT4		

(table continues...)

Table 10 (continued) Hardware I/O Controlled Functions

Function	Outputs	Outputs	Inputs	Inputs	Pull Control	Pull Control	Pull Control	Pull Control
	HWO0	HWO1	HWI0	HWI1	HW0_PD	HW0_PU	HW1_PD	HW1_PU
P1.3		USIC0_CH0.DOUT3		USIC0_CH0.HWIN3	$\overline{\text{BCCU0.OUT5}}$	BCCU0.OUT5		
P1.4					$\overline{\text{BCCU0.OUT6}}$	BCCU0.OUT6		
P1.5					$\overline{\text{BCCU0.OUT7}}$	BCCU0.OUT7		
P1.6					$\overline{\text{BCCU0.OUT8}}$	BCCU0.OUT8		
P1.7								
P1.8								
P2.0					$\overline{\text{BCCU0.OUT1}}$	BCCU0.OUT1		
P2.1					$\overline{\text{BCCU0.OUT6}}$	BCCU0.OUT6		
P2.2					$\overline{\text{BCCU0.OUT0}}$	BCCU0.OUT0	$\overline{\text{CCU40.OUT3}}$	CCU40.OUT3
P2.3					$\overline{\text{ACMP2.OUT}}$	ACMP2.OUT		
P2.4					$\overline{\text{BCCU0.OUT8}}$	BCCU0.OUT8		
P2.5					$\overline{\text{ACMP1.OUT}}$	ACMP1.OUT		
P2.6					$\overline{\text{BCCU0.OUT2}}$	BCCU0.OUT2	$\overline{\text{CCU40.OUT3}}$	CCU40.OUT3
P2.7					$\overline{\text{BCCU0.OUT8}}$	BCCU0.OUT8	$\overline{\text{CCU40.OUT3}}$	CCU40.OUT3
P2.8					$\overline{\text{BCCU0.OUT1}}$	BCCU0.OUT1	$\overline{\text{CCU40.OUT2}}$	CCU40.OUT2
P2.9					$\overline{\text{BCCU0.OUT7}}$	BCCU0.OUT7	$\overline{\text{CCU40.OUT2}}$	CCU40.OUT2
P2.10					$\overline{\text{BCCU0.OUT4}}$	BCCU0.OUT4		
P2.11					$\overline{\text{BCCU0.OUT5}}$	BCCU0.OUT5		
P2.12					$\overline{\text{BCCU0.OUT3}}$	BCCU0.OUT3	$\overline{\text{CCU41.OUT0}}$	CCU41.OUT0
P2.13					$\overline{\text{BCCU0.OUT4}}$	BCCU0.OUT4	$\overline{\text{CCU41.OUT2}}$	CCU41.OUT2

(table continues...)

Table 10 (continued) Hardware I/O Controlled Functions

Function	Outputs	Outputs	Inputs	Inputs	Pull Control	Pull Control	Pull Control	Pull Control
	HWO0	HWO1	HWI0	HWI1	HW0_PD	HW0_PU	HW1_PD	HW1_PU
P3.0								
P3.1		USIC1_CH0.DOUT3		USIC1_CH0.HWIN3				
P3.2		USIC1_CH0.DOUT2		USIC1_CH0.HWIN2				
P3.3		USIC1_CH0.DOUT1		USIC1_CH0.HWIN1				
P3.4		USIC1_CH0.DOUT0		USIC1_CH0.HWIN0				
P4.0								
P4.1								
P4.2								
P4.3								
P4.4	LEDTS2.EXTENDED0		LEDTS2.TSIN0	LEDTS2.TSIN0	Reserved for LEDTS Scheme A: pull-down disabled always	Reserved for LEDTS Scheme A: pull-down enabled always	Reserved for LEDTS Scheme B: pull-up enabled and pull-down disabled, and vice versa	
P4.5	LEDTS2.EXTENDED1		LEDTS2.TSIN1	LEDTS2.TSIN1				
P4.6	LEDTS2.EXTENDED2		LEDTS2.TSIN2	LEDTS2.TSIN2				
P4.7	LEDTS2.EXTENDED3		LEDTS2.TSIN3	LEDTS2.TSIN3				

(table continues...)

Table 10 (continued) Hardware I/O Controlled Functions

Function	Outputs	Outputs	Inputs	Inputs	Pull Control	Pull Control	Pull Control	Pull Control
	HWO0	HWO1	HWI0	HWI1	HW0_PD	HW0_PU	HW1_PD	HW1_PU
P4.8	LEDTS2.EXTENDED4		LEDTS2.TSIN4	LEDTS2.TSIN4				
P4.9	LEDTS2.EXTENDED5		LEDTS2.TSIN5	LEDTS2.TSIN5				
P4.10	LEDTS2.EXTENDED6		LEDTS2.TSIN6	LEDTS2.TSIN6				
P4.11	LEDTS2.EXTENDED7		LEDTS2.TSIN7	LEDTS2.TSIN7				

3 Electrical Parameters

This section provides the electrical parameters which are implementation-specific for the XMC1400.

3.1 General Parameters

3.1.1 Parameter Interpretation

The parameters listed in this section represent partly the characteristics of the XMC1400 and partly its requirements on the system. To aid interpreting the parameters easily when evaluating them for a design, they are indicated by the abbreviations in the “Symbol” column:

- **CC**

  Such parameters indicate **C**ontroller **C**haracteristics, which are distinctive feature of the XMC1400 and must be regarded for a system design.
- **SR**

  Such parameters indicate **S**ystem **R**equirements, which must be provided by the application system in which the XMC1400 is designed in.

3.1.2 Absolute Maximum Ratings

Stresses above the values listed under “Absolute Maximum Ratings” may cause permanent damage to the device. This is a stress rating only and functional operation of the device at these or any other conditions above those indicated in the operational sections of this specification is not implied. Exposure to absolute maximum rating conditions may affect device reliability.

Table 11 Absolute Maximum Rating Parameters

Parameter	Symbol	Values			Unit	Note/Test Condition
		Min.	Typ.	Max.		
Junction temperature	T_J SR	-40	–	115	°C	–
Storage temperature	T_{ST} SR	-40	–	125	°C	–
Voltage on power supply pin with respect to V_{SSP}	V_{DDP} SR	-0.3	–	6	V	–
Voltage on digital pins with respect to V_{SSP}[1)]	V_{IN} SR	-0.5	–	V_{DDP} + 0.5 or max. 6	V	whichever is lower
Voltage on P2 pins with respect to V_{SSP}[2)]	V_{INP2} SR	-0.3	–	V_{DDP} + 0.3	V	–
Voltage on analog input pins with respect to V_{SSP}	V_{AIN} V_{AREF} SR	-0.5	–	V_{DDP} + 0.5 or max. 6	V	whichever is lower
Input current on any pin during overload condition	I_{IN} SR	-10	–	10	mA	–
Absolute maximum sum of all input currents during overload condition	ΣI_{IN} SR	-50	–	+50	mA	–

1) Excluding port pins P2.[1,2,6,7,8,9,11].
2) Applicable to port pins P2.[1,2,6,7,8,9,11].

3.1.3 Pin Reliability in Overload

When receiving signals from higher voltage devices, low-voltage devices experience overload currents and voltages that go beyond their own IO power supplies specification.

Table 12 defines overload conditions that will not cause any negative reliability impact if all the following conditions are met:

- full operation life-time is not exceeded
- Operating Conditions are met for:
  - pad supply levels (V_{DDP})
  - temperature

If a pin current is outside of the Operating Conditions but within the overload conditions, then the parameters of this pin as stated in the Operating Conditions can no longer be guaranteed. Operation is still possible in most cases but with relaxed parameters.

***Note**: An overload condition on one or more pins does not require a reset.*

***Note**: A series resistor at the pin to limit the current to the maximum permitted overload current is sufficient to handle failure situations like short to battery.*

Table 12 Overload Parameters

Parameter	Symbol	Values			Unit	Note/Test Condition
		Min.	Typ.	Max.		
Input current on any port pin during overload condition	I_{OV} SR	-5	–	5	mA	
Absolute sum of all input circuit currents during overload condition	I_{OVS} SR	–	–	25	mA	

Figure 13 shows the path of the input currents during overload via the ESD protection structures. The diodes against V_{DDP} and ground are a simplified representation of these ESD protection structures.

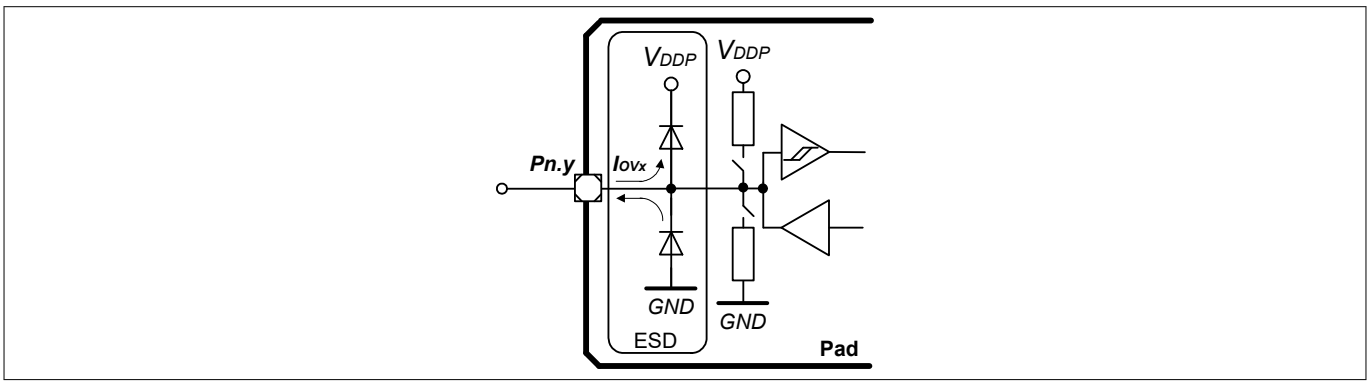

Figure 13 Input Overload Current via ESD structures

Table 13 and Table 14 list input voltages that can be reached under overload conditions. Note that the absolute maximum input voltages as defined in the Absolute Maximum Ratings must not be exceeded during overload.

Table 13 PN-Junction Characteristics for positive Overload

Pad Type	I_{OV} = 5 mA
Standard, High-current, AN/DIG_IN	$V_{IN} = V_{DDP} + 0.5$ V $V_{AIN} = V_{DDP} + 0.5$ V $V_{AREF} = V_{DDP} + 0.5$ V
P2.[1,2,6:9,11]	$V_{INP2} = V_{DDP} + 0.3$ V

Table 14 PN-Junction Characteristics for negative Overload

Pad Type	I_{OV} = 5 mA
Standard, High-current, AN/DIG_IN	$V_{IN} = V_{SS} - 0.5$ V $V_{AIN} = V_{SS} - 0.5$ V $V_{AREF} = V_{SS} - 0.5$ V
P2.[1,2,6:9,11]	$V_{INP2} = V_{SS} - 0.3$ V

3.1.4 Operating Conditions

The following operating conditions must not be exceeded in order to ensure correct operation and reliability of the XMC1400. All parameters specified in the following tables refer to these operating conditions, unless noted otherwise.

Table 15 Operating Conditions Parameters

Parameter	Symbol	Values			Unit	Note/Test Condition
		Min.	Typ.	Max.		
Ambient Temperature	T_A SR	-40	–	85	°C	Temp. Range F
		-40	–	105	°C	Temp. Range X
Digital supply voltage[1)]	V_{DDP} SR	1.8	–	5.5	V	
Short circuit current of digital outputs	I_{SC} SR	-5	–	5	mA	
Absolute sum of short circuit currents of the device	ΣI_{SC_D} SR	–	–	25	mA	

1) See also the Supply Monitoring thresholds, Chapter 3.3.2.

3.2 DC Parameters

3.2.1 Input/Output Characteristics

Table 16 provides the characteristics of the input/output pins of the XMC1400.

***Note**: These parameters are not subject to production test, but verified by design and/or characterization.*

***Note**: Unless otherwise stated, input DC and AC characteristics, including peripheral timings, assume that the input pads operate with the standard hysteresis.*

Table 16 Input/Output Characteristics (Operating Conditions apply)

Parameter	Symbol	Limit Values		Unit	Note/Test Condition
		Min.	Max.		
Output low voltage on port pins (with standard pads)	V_{OLP} CC	–	1.0	V	I_{OL} = 11 mA (5 V) I_{OL} = 7 mA (3.3 V)
		–	0.4	V	I_{OL} = 5 mA (5 V) I_{OL} = 3.5 mA (3.3 V)
Output low voltage on high current pads	V_{OLP1} CC	–	1.0	V	I_{OL} = 50 mA (5 V) I_{OL} = 25 mA (3.3 V)
		–	0.32	V	I_{OL}= 10 mA (5 V)
		–	0.4	V	I_{OL} = 5 mA (3.3 V)
Output high voltage on port pins (with standard pads)	V_{OHP} CC	V_{DDP} - 1.0	–	V	I_{OH} = -10 mA (5 V) I_{OH} = -7 mA (3.3 V)
		V_{DDP} - 0.4	–	V	I_{OH} = -4.5 mA (5 V) I_{OH} = -2.5 mA (3.3 V)
Output high voltage on high current pads	V_{OHP1} CC	V_{DDP} - 0.32	–	V	I_{OH} = -6 mA (5 V)
		V_{DDP} - 1.0	–	V	I_{OH} = -8 mA (3.3 V)
		V_{DDP} - 0.4	–	V	I_{OH} = -4 mA (3.3 V)
Input low voltage on port pins (Standard Hysteresis)	V_{ILPS} SR	–	0.19 × V_{DDP}	V	CMOS Mode (5 V, 3.3 V & 2.2 V)
Input high voltage on port pins (Standard Hysteresis)	V_{IHPS} SR	0.7 × V_{DDP}	–	V	CMOS Mode (5 V, 3.3 V & 2.2 V)
Input low voltage on port pins (Large Hysteresis)	V_{ILPL} SR	–	0.08 × V_{DDP}	V	CMOS Mode (5 V, 3.3 V & 2.2 V)
Input high voltage on port pins (Large Hysteresis)	V_{IHPL} SR	0.85 × V_{DDP}	–	V	CMOS Mode (5 V, 3.3 V & 2.2 V)
Rise/fall time on High Current Pad[1)]	t_{HCPR}, t_{HCPF} CC	–	9	ns	50 pF @ 5 V[2)]
		–	12	ns	50 pF @ 3.3 V[3)]

(table continues...)

Table 16 (continued) Input/Output Characteristics (Operating Conditions apply)

Parameter	Symbol	Limit Values		Unit	Note/Test Condition
		Min.	Max.		
		–	25	ns	50 pF @ 1.8 V[4)]
Rise/fall time on Standard Pad[1)]	t_R, t_F CC	–	12	ns	50 pF @ 5 V[5)]
		–	15	ns	50 pF @ 3.3 V[6)]
		–	31	ns	50 pF @ 1.8 V[7)]
Input Hysteresis on port pin except P2.3 - P2.9[8)]	*HYS* CC	0.08 × V_{DDP}	–	V	CMOS Mode (5 V), Standard Hysteresis
		0.03 × V_{DDP}	–	V	CMOS Mode (3.3 V), Standard Hysteresis
		0.02 × V_{DDP}	–	V	CMOS Mode (2.2 V), Standard Hysteresis
		0.5 × V_{DDP}	0.75 × V_{DDP}	V	CMOS Mode (5 V), Large Hysteresis
		0.4 × V_{DDP}	0.75 × V_{DDP}	V	CMOS Mode (3.3 V), Large Hysteresis
		0.2 × V_{DDP}	0.65 × V_{DDP}	V	CMOS Mode (2.2 V), Large Hysteresis
Input Hysteresis on port pin P2.3 - P2.9[8)]	*HYS*_P2 CC	0.08 × V_{DDP}	–	V	CMOS Mode (5 V), Standard Hysteresis
		0.03 × V_{DDP}	–	V	CMOS Mode (3.3 V), Standard Hysteresis
		0.02 × V_{DDP}	–	V	CMOS Mode (2.2 V), Standard Hysteresis
		0.35 × V_{DDP}	0.75 × V_{DDP}	V	CMOS Mode (5 V), Large Hysteresis
		0.25 × V_{DDP}	0.75 × V_{DDP}	V	CMOS Mode (3.3 V), Large Hysteresis
		0.15 × V_{DDP}	0.65 × V_{DDP}	V	CMOS Mode (2.2 V), Large Hysteresis
Pin capacitance (digital inputs/outputs)	C_{IO} CC	–	10	pF	
Pull-up current on port pins	I_{PUP} CC	–	-80	µA	$V_{IH,min}$ (5 V)
		-95	–	µA	$V_{IL,max}$ (5 V)
		–	-50	µA	$V_{IH,min}$ (3.3 V)
		-65	–	µA	$V_{IL,max}$ (3.3 V)
Pull-down current on port pins	I_{PDP} CC	–	40	µA	$V_{IL,max}$ (5 V)
		95	–	µA	$V_{IH,min}$ (5 V)

(table continues...)

Table 16 (continued) Input/Output Characteristics (Operating Conditions apply)

Parameter	Symbol	Limit Values		Unit	Note/Test Condition
		Min.	Max.		
		–	30	µA	$V_{IL,max}$ (3.3 V)
		60	–	µA	$V_{IH,min}$ (3.3 V)
Input leakage current except P0.11[9]	I_{OZP} CC	-1	1	µA	$0 < V_{IN} < V_{DDP}$, $T_A \leq 105°C$
Input leakage current for P0.11[9]	I_{OZP1} CC	-10	1	µA	$0 < V_{IN} < V_{DDP}$, $T_A \leq 105°C$
Voltage on any pin during V_{DDP} power off	V_{PO} SR	–	0.3	V	[10]
Maximum current per pin (excluding P1, V_{DDP} and V_{SS})	I_{MP} SR	-10	11	mA	–
Maximum current per high current pins	I_{MP1A} SR	-10	50	mA	–
Maximum current into V_{DDP} (VQFN64, LQFP64)	I_{MVDD1} SR	–	520	mA	
Maximum current into V_{DDP} (VQFN48)	I_{MVDD2} SR	–	390	mA	
Maximum current into V_{DDP} (VQFN40)	I_{MVDD3} SR	–	260	mA	
Maximum current out of V_{SS} (VQFN64, LQFP64)	I_{MVSS1} SR	–	390	mA	
Maximum current out of V_{SS} (VQFN48)	I_{MVSS2} SR	–	260	mA	
Maximum current out of V_{SS} (VQFN40)	I_{MVSS3} SR	–	260	mA	

1) Rise/Fall time parameters are taken with 10% - 90% of supply.
2) Additional rise/fall time valid for C_L = 50 pF - C_L = 100 pF @ 0.150 ns/pF at 5 V supply voltage.
3) Additional rise/fall time valid for C_L = 50 pF - C_L = 100 pF @ 0.205 ns/pF at 3.3 V supply voltage.
4) Additional rise/fall time valid for C_L = 50 pF - C_L = 100 pF @ 0.445 ns/pF at 1.8 V supply voltage.
5) Additional rise/fall time valid for C_L = 50 pF - C_L = 100 pF @ 0.225 ns/pF at 5 V supply voltage.
6) Additional rise/fall time valid for C_L = 50 pF - C_L = 100 pF @ 0.288 ns/pF at 3.3 V supply voltage.
7) Additional rise/fall time valid for C_L = 50 pF - C_L = 100 pF @ 0.588 ns/pF at 1.8 V supply voltage.
8) Hysteresis is implemented to avoid meta stable states and switching due to internal ground bounce. It cannot be guaranteed that it suppresses switching due to external system noise.
9) An additional error current (I_{INJ}) will flow if an overload current flows through an adjacent pin.
10) However, for applications with strict low power-down current requirements, it is mandatory that no active voltage source is supplied at any GPIO pin when V_{DDP} is powered off.

3.2.2 Analog to Digital Converters (ADC)

Table 17 shows the Analog to Digital Converter (ADC) characteristics.

***Note**: These parameters are not subject to production test, but verified by design and/or characterization.*

Table 17 ADC Characteristics (Operating Conditions apply)[1)]

Parameter	Symbol	Values			Unit	Note/Test Condition
		Min.	Typ.	Max.		
Supply voltage range (internal reference)	V_{DD_int} SR	2.0	–	3.0	V	SHSCFG.AREF = 11_B; CALCTR.CALGNSTC = $0C_H$ for f_{SH} = 32 MHz, 12_H for f_{SH} = 48 MHz
		3.0	–	5.5	V	SHSCFG.AREF = 10_B
Supply voltage range (external reference)	V_{DD_ext} SR	3.0	–	5.5	V	SHSCFG.AREF = 00_B
Analog input voltage range	V_{AIN} SR	V_{SSP} - 0.05	–	V_{DDP} + 0.05	V	
Auxiliary analog reference ground[2)]	V_{REFGND} SR	V_{SSP} - 0.05	–	1.0	V	G0CH0
		V_{SSP} - 0.05	–	0.2	V	G1CH0
Internal reference voltage (full scale value)	V_{REFINT} CC	5			V	
Switched capacitance of an analog input	C_{AINS} CC	–	1.2	2	pF	GNCTRxz.GAINy = 00_B (unity gain)
		–	1.2	2	pF	GNCTRxz.GAINy = 01_B (gain g1)
		–	4.5	6	pF	GNCTRxz.GAINy = 10_B (gain g2)
		–	4.5	6	pF	GNCTRxz.GAINy = 11_B (gain g3)
Total capacitance of an analog input	C_{AINT} CC	–	–	10	pF	
Total capacitance of the reference input	C_{AREFT} CC	–	–	10	pF	
Gain settings	G_{IN} CC	1			–	GNCTRxz.GAINy = 00_B (unity gain)
		3			–	GNCTRxz.GAINy = 01_B (gain g1)
		6			–	GNCTRxz.GAINy = 10_B (gain g2)
		12			–	GNCTRxz.GAINy = 11_B (gain g3)

(table continues...)

Table 17 (continued) ADC Characteristics (Operating Conditions apply)[1)]

Parameter	Symbol	Values			Unit	Note/Test Condition
		Min.	Typ.	Max.		
Sample Time	t_{sample} CC	5	–	–	$1/f_{ADC}$	V_{DD} = 5.0 V, f_{ADCI} = 48 MHz
		3	–	–	$1/f_{ADC}$	V_{DD} = 5.0 V, f_{ADCI} = 32 MHz
		3	–	–	$1/f_{ADC}$	V_{DD} = 3.3 V, f_{ADCI} = 32 MHz
		30	–	–	$1/f_{ADC}$	V_{DD} = 2.0 V, f_{ADCI} = 32 MHz
Conversion time in fast compare mode	t_{CF} CC	9			$1/f_{ADC}$	[3)]
Conversion time in 12-bit mode	t_{C12} CC	20			$1/f_{ADC}$	[3)]
Maximum sample rate in 12-bit mode[4)]	f_{C12} CC	–	–	$f_{ADC}/42.5$	–	1 sample pending
		–	–	$f_{ADC}/62.5$	–	2 samples pending
Conversion time in 10-bit mode	t_{C10} CC	18			$1/f_{ADC}$	[3)]
Maximum sample rate in 10-bit mode[4)]	f_{C10} CC	–	–	$f_{ADC}/40.5$	–	1 sample pending
		–	–	$f_{ADC}/58.5$	–	2 samples pending
Conversion time in 8-bit mode	t_{C8} CC	16			$1/f_{ADC}$	[3)]
Maximum sample rate in 8-bit mode[4)]	f_{C8} CC	–	–	$f_{ADC}/38.5$	–	1 sample pending
		–	–	$f_{ADC}/54.5$	–	2 samples pending
RMS noise[5)]	EN_{RMS} CC	–	1.5	–	LSB12	DC input, SHSCFG.AREF = 00_B, GNCTRxz.GAINy = 00_B (unity gain), V_{DD} = 5.0 V, V_{AIN} = 2.5 V, 25°C
DNL error	EA_{DNL} CC	–	±2.0	–	LSB12	
INL error	EA_{INL} CC	–	±4.0	–	LSB12	
Gain error with external reference	EA_{GAIN} CC	–	±0.5	–	%	SHSCFG.AREF = 00_B (calibrated)
Gain error with internal reference [6)]	EA_{GAIN} CC	–	±3.6	–	%	SHSCFG.AREF = $1X_B$ (calibrated), -40°C - 110°C
		–	±2.0	–	%	SHSCFG.AREF = $1X_B$ (calibrated), 0°C - 85°C
Offset error	EA_{OFF} CC	–	±8.0	–	mV	Calibrated, V_{DD} = 5.0 V

1) The parameters are defined for ADC clock frequencies f_{SH} = 32 MHz for the full supply range, and f_{SH} = 48 MHz at V_{DD_int}, V_{DD_ext} = 5 V. Usage of any other frequencies may affect the ADC performance.
2) The alternate reference ground connection is separate for each converter. This mode, therefore, provides the lowest noise impact.
3) No pending samples assumed, excluding sampling time and calibration.
4) Includes synchronization and calibration (average of gain and offset calibration).
5) This parameter can also be defined as an SNR value: SNR[dB] = 20 × log(A_{MAXeff}/N_{RMS}).
With $A_{MAXeff} = 2^N/2$, SNR[dB] = 20 × log(2048/N_{RMS}) [N = 12].
N_{RMS} = 1.5 LSB12, therefore, equals SNR = 20 × log(2048/1.5) = 62.7 dB.
6) Includes error from the reference voltage.

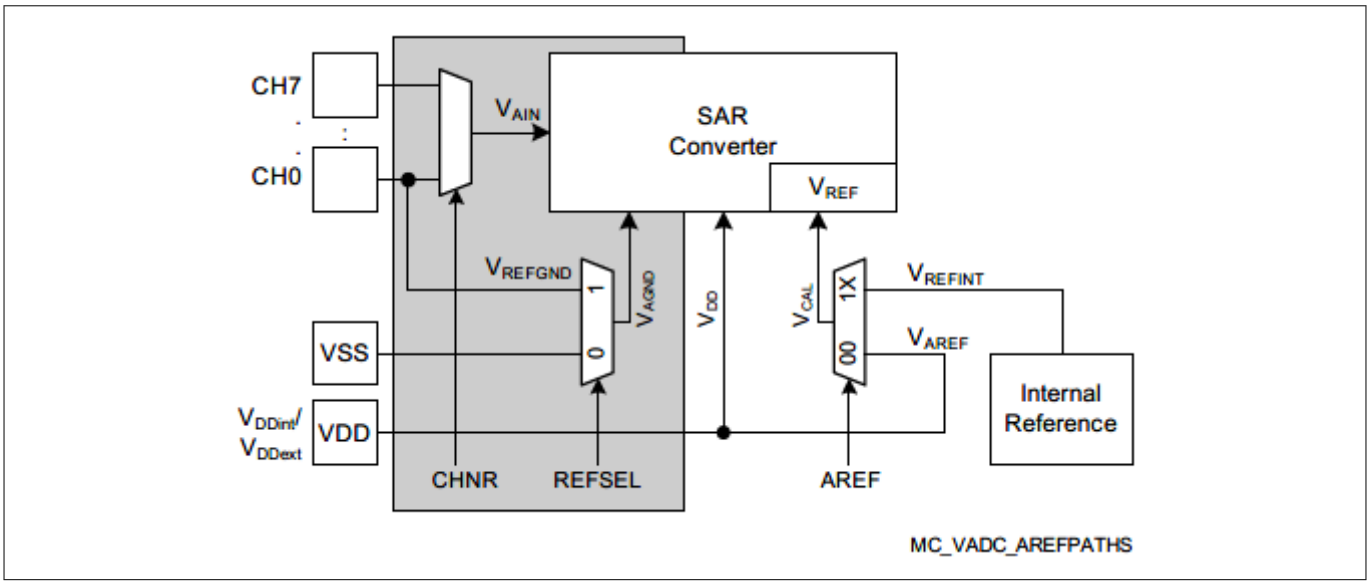

Figure 14 **ADC Voltage Supply**

3.2.3 Out of Range Comparator (ORC) Characteristics

The Out-of-Range Comparator (ORC) triggers on analog input voltages (V_{AIN}) above V_{DDP} on selected input pins (ORCx.AIN) and generates a service request trigger (ORCx.OUT).

***Note**: These parameters are not subject to production test, but verified by design and/or characterization.*

Table 18 **Out of Range Comparator (ORC) Characteristics (Operating Conditions apply; V_{DDP} = 3.0 V - 5.5 V; C_L = 0.25 pF)**

Parameter	Symbol	Values			Unit	Note/Test Condition
		Min.	Typ.	Max.		
DC Switching Level	V_{ODC} CC	–	–	180	mV	$V_{AIN} \geq V_{DDP} + V_{ODC}$
Hysteresis	V_{OHYS} CC	15	–	54	mV	
Always detected Overvoltage Pulse	t_{OPDD} CC	103	–	–	ns	$V_{AIN} \geq V_{DDP}$ + 150 mV
		88	–	–	ns	$V_{AIN} \geq V_{DDP}$ + 350 mV
Never detected Overvoltage Pulse	t_{OPDN} CC	–	–	21	ns	$V_{AIN} \geq V_{DDP}$ + 150 mV
		–	–	11	ns	$V_{AIN} \geq V_{DDP}$ + 350 mV
Detection Delay	t_{ODD} CC	39	–	132	ns	$V_{AIN} \geq V_{DDP}$ + 150 mV
		31	–	121	ns	$V_{AIN} \geq V_{DDP}$ + 350 mV

(table continues...)

Table 18 **(continued) Out of Range Comparator (ORC) Characteristics (Operating Conditions apply; V_{DDP} = 3.0 V - 5.5 V; C_L = 0.25 pF)**

Parameter	Symbol	Values			Unit	Note/Test Condition
		Min.	Typ.	Max.		
Release Delay	t_{ORD} CC	44	–	240	ns	$V_{AIN} \leq V_{DDP}$; V_{DDP} = 5 V
		57	–	340	ns	$V_{AIN} \leq V_{DDP}$; V_{DDP} = 3.3 V
Enable Delay	t_{OED} CC	–	–	300	ns	ORCCTRL.ENORCx = 1

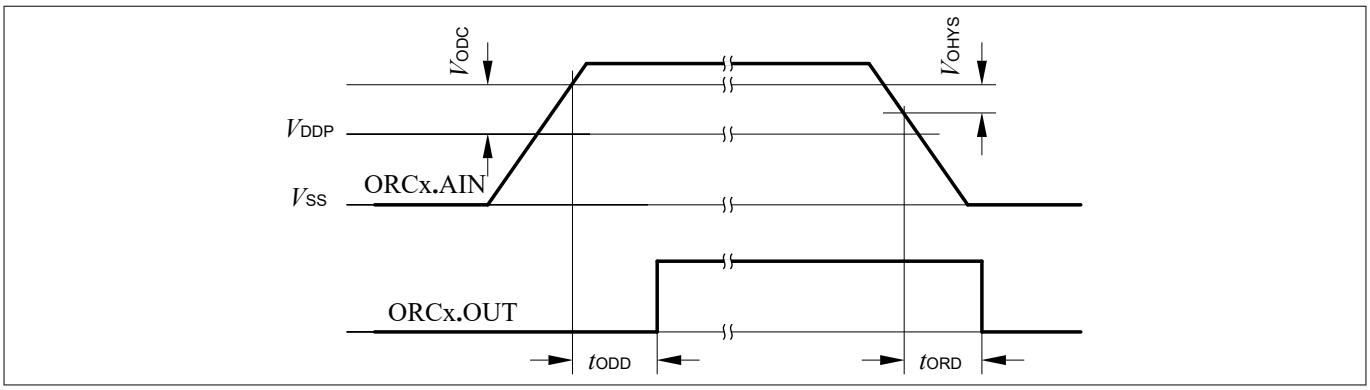

Figure 15 **ORCx.OUT Trigger Generation**

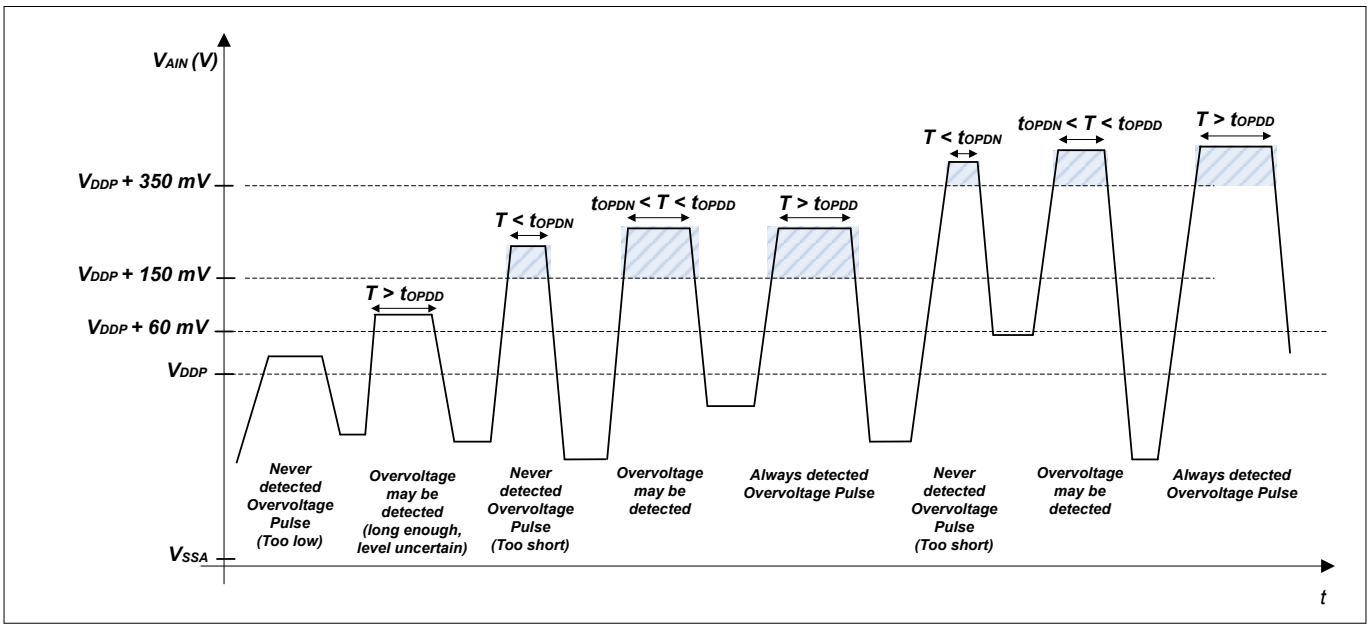

Figure 16 **ORC Detection Ranges**

3.2.4 Analog Comparator Characteristics

Table 19 below shows the Analog Comparator characteristics.

***Note**: These parameters are not subject to production test, but verified by design and/or characterization.*

Table 19 Analog Comparator Characteristics (Operating Conditions apply)

Parameter	Symbol	Limit Values			Unit	Note/Test Condition
		Min.	Typ.	Max.		
Input Voltage	V_{CMP} SR	-0.05	–	V_{DDP} + 0.05	V	
Input Offset	V_{CMPOFF} CC	–	+/-3	–	mV	High power mode ΔV_{CMP} < 200 mV
Propagation Delay[1)]	t_{PDELAY} CC	–	25	–	ns	High power mode, ΔV_{CMP} = 100 mV
		–	80	–	ns	High power mode, ΔV_{CMP} = 25 mV
		–	250	–	ns	Low power mode, ΔV_{CMP} = 100 mV
		–	700	–	ns	Low power mode, ΔV_{CMP} = 25 mV
Current Consumption	I_{ACMP} CC	–	100	–	µA	First active ACMP in high power mode, ΔV_{CMP} > 30 mV
		–	66	–	µA	Each additional ACMP in high power mode, ΔV_{CMP} > 30 mV
		–	10	–	µA	First active ACMP in low power mode
		–	6	–	µA	Each additional ACMP in low power mode
Input Hysteresis	V_{HYS} CC	–	+/-15	–	mV	
Filter Delay[1)]	t_{FDELAY} CC	–	5	–	ns	

1) Total Analog Comparator Delay is the sum of Propagation Delay and Filter Delay.

3.2.5 Temperature Sensor Characteristics

***Note**: These parameters are not subject to production test, but verified by design and/or characterization.*

Table 20 Temperature Sensor Characteristics

Parameter	Symbol	Values			Unit	Note/Test Condition
		Min.	Typ.	Max.		
Measurement time	t_M CC	–	–	10	ms	
Temperature sensor range	T_{SR} SR	-40	–	115	°C	
Sensor Accuracy[1)]	T_{TSAL} CC	-6	–	6	°C	$T_J > 20°C$
		-10	–	10	°C	$0°C \le T_J \le 20°C$
		–	-/+8	–	°C	$T_J < 0°C$
Start-up time	t_{TSST} SR	–	–	15	µs	

1) The temperature sensor accuracy is independent of the supply voltage.

3.2.6 Oscillator Pins

***Note**: It is strongly recommended to measure the oscillation allowance (negative resistance) in the final target system (layout) to determine the optimal parameters for the oscillator operation. Please refer to the limits specified by the crystal or ceramic resonator supplier.*

***Note**: These parameters are not subject to production test, but verified by design and/or characterization.*

The oscillator pins can be operated with an external crystal/resonator (see Figure 17) or in direct input mode (see Figure 18).

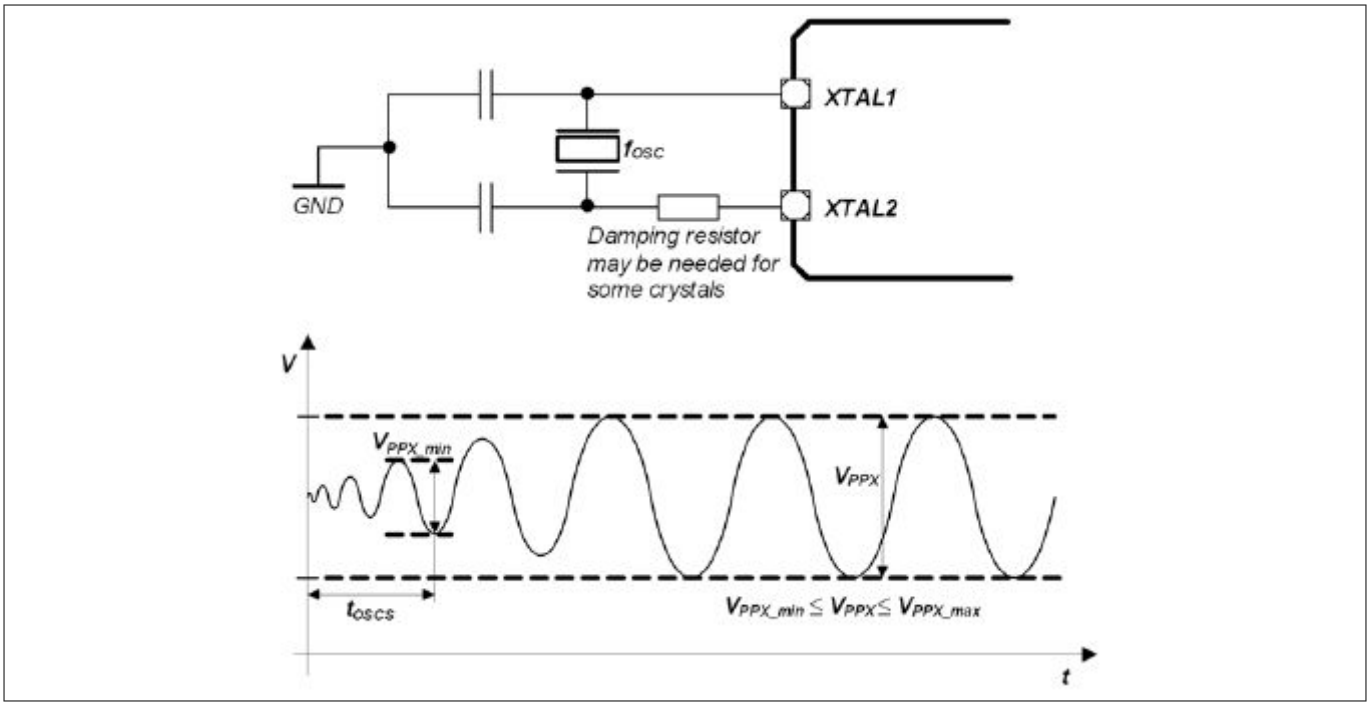

Figure 17 Oscillator in Crystal Mode

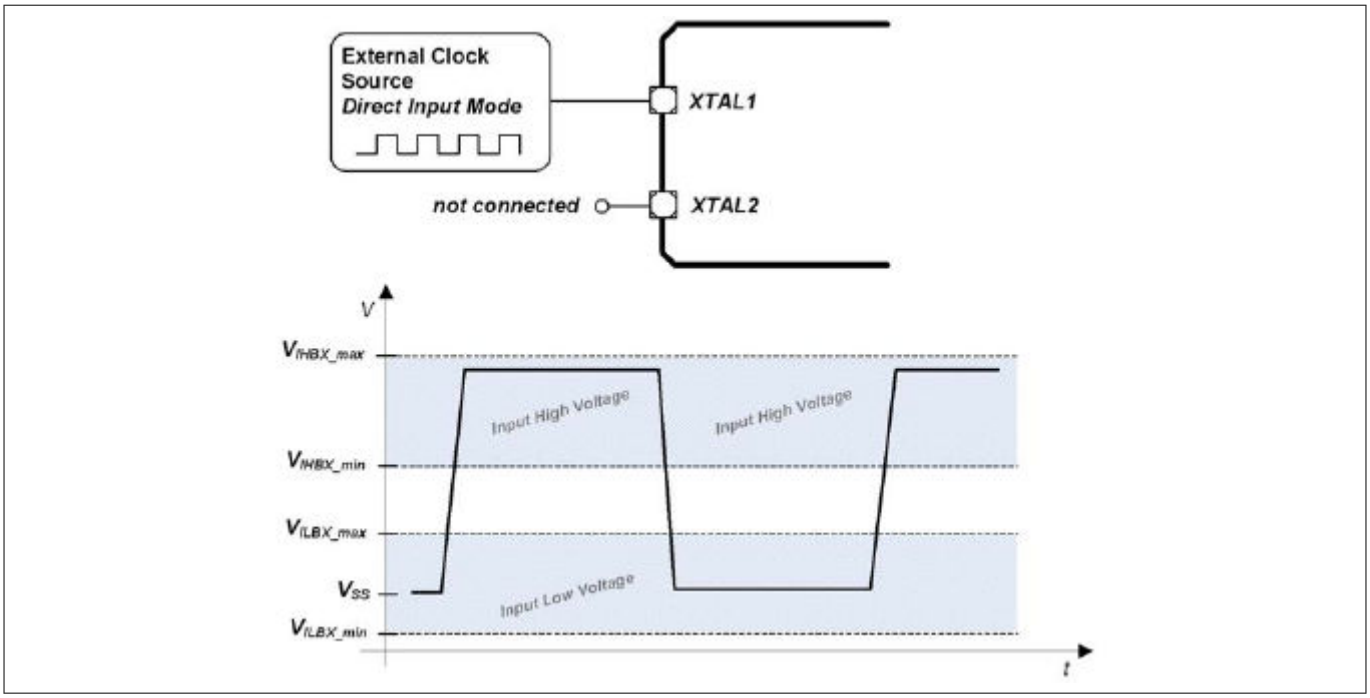

Figure 18 **Oscillator in Direct Input Mode**

Table 21 **OSC_XTAL Parameters**

Parameter	Symbol	Values			Unit	Note/Test Condition
		Min.	Typ.	Max.		
Input frequency	f_{OSC} SR	4	–	48	MHz	Direct Input Mode
		4	–	20	MHz	External Crystal Mode
Oscillator start-up time[1) 2)]	t_{OSCS} CC	–	–	10	ms	
Input voltage at XTAL1	V_{IX} SR	-0.3	–	1.5	V	External Crystal Mode
		-0.3	–	5.5	V	Direct Input Mode
Input amplitude (peak- to-peak) at XTAL1[2) 3)]	V_{PPX} SR	0.6	–	1.7	V	External Crystal Mode

1) t_{OSCS} is defined from the moment the oscillator is enabled with SCU_ANAOSCHPCTRL.MODE until the oscillations reach an amplitude at XTAL1 of 0.9 * V_{PPX}.
2) The external oscillator circuitry must be optimized by the customer and checked for negative resistance and amplitude as recommended and specified by crystal suppliers.
3) If the shaper unit is enabled and not bypassed.

Table 22 **RTC_XTAL Parameters**

Parameter	Symbol	Values			Unit	Note/Test Condition
		Min.	Typ.	Max.		
Input frequency	f_{OSC} SR	–	32.768	–	kHz	
Oscillator start-up time[1) 2)]	t_{OSCS} CC	–	–	5	s	

(table continues...)

Table 22 (continued) RTC_XTAL Parameters

Parameter	Symbol	Values			Unit	Note/Test Condition
		Min.	Typ.	Max.		
Input voltage at RTC_XTAL1	V_{IX} SR	-0.3	–	1.5	V	
Input amplitude (peak- to-peak) at RTC_XTAL1[2) 3)]	V_{PPX} SR	0.2	–	1.2	V	

1) t_{OSCS} is defined from the moment the oscillator is enabled by the user with SCU_ANAOSCLPCTRL.MODE until the oscillations reach an amplitude at RTC_XTAL1 of 0.9 * V_{PPX}.
2) The external oscillator circuitry must be optimized by the customer and checked for negative resistance and amplitude as recommended and specified by crystal suppliers.
3) If the shaper unit is enabled and not bypassed.

3.2.7 Power Supply Current

The total power supply current defined below consists of a leakage and a switching component.

Application relevant values are typically lower than those given in the following tables, and depend on the customer's system operating conditions (e.g. thermal connection or used application configurations).

***Note**: These parameters are not subject to production test, but verified by design and/or characterization.*

Table 23 Power Supply parameter table; V_{DDP} = 5 V

Parameter	Symbol	Values			Unit	Note/Test Condition
		Min.	Typ.[1)]	Max.		
Active mode current Peripherals enabled f_{MCLK}/f_{PCLK} in MHz[2)]	I_{DDPAE} CC	–	14.1	20	mA	48/96
		–	9.8	–	mA	24/48
		–	7.8	–	mA	16/32
		–	6.4	–	mA	8/16
		–	4.4	–	mA	1/1
Active mode current Peripherals disabled f_{MCLK}/f_{PCLK} in MHz[3)]	I_{DDPAD} CC	–	6.2	–	mA	48/96
		–	4.6	–	mA	24/48
		–	3.6	–	mA	16/32
		–	3.1	–	mA	8/16
		–	1.8	–	mA	1/1
Active mode current Code execution from RAM Flash is powered down f_{MCLK}/f_{PCLK} in MHz	I_{DDPAR} CC	–	9.6	–	mA	48/96
Sleep mode current Peripherals clock enabled f_{MCLK}/f_{PCLK} in MHz[4)]	I_{DDPSE} CC	–	11.0	–	mA	48/96
		–	7.6	–	mA	24/48
		–	6.4	–	mA	16/32

(table continues...)

Table 23 **(continued) Power Supply parameter table; V_{DDP} = 5 V**

Parameter	Symbol	Values			Unit	Note/Test Condition
		Min.	Typ.[1]	Max.		
		–	5.3	–	mA	8/16
		–	4.2	–	mA	1/1
Sleep mode current Peripherals clock disabled Flash active f_{MCLK}/f_{PCLK} in MHz[5]	I_{DDPSD} CC	–	2.8	–	mA	48/96
		–	2.2	–	mA	24/48
		–	2.0	–	mA	16/32
		–	1.9	–	mA	8/16
		–	1.7	–	mA	1/1
Sleep mode current Peripherals clock disabled Flash powered down f_{MCLK}/f_{PCLK} in MHz[6]	I_{DDPSR} CC	–	2.2	–	mA	48/96
		–	1.7	–	mA	24/48
		–	1.4	–	mA	16/32
		–	1.2	–	mA	8/16
		–	1.1	–	mA	1/1
Deep Sleep mode current[7]	I_{DDPDS} CC	–	0.27	–	mA	
Wake-up time from Sleep to Active mode[8]	t_{SSA} CC	–	6	–	cycles	
Wake-up time from Deep Sleep to Active mode[9]	t_{DSA} CC	–	290	–	µsec	

1) The typical values are measured at T_A = + 25°C and V_{DDP} = 5 V.
2) CPU and all peripherals clock enabled, Flash is in active mode.
3) CPU enabled, all peripherals clock disabled, Flash is in active mode.
4) CPU in sleep, all peripherals clock enabled and Flash is in active mode.
5) CPU in sleep, Flash is in active mode.
6) CPU in sleep, Flash is powered down and code executed from RAM after wake–up.
7) CPU in sleep, peripherals clock disabled, Flash is powered down and code executed from RAM after wake-up.
8) CPU in sleep, Flash is in active mode during sleep mode.
9) CPU in sleep, Flash is in powered down mode during deep sleep mode.

Figure 19 shows typical graphs for active mode supply current for V_{DDP} = 5 V, V_{DDP} = 3.3 V, V_{DDP} = 1.8 V across different clock frequencies.

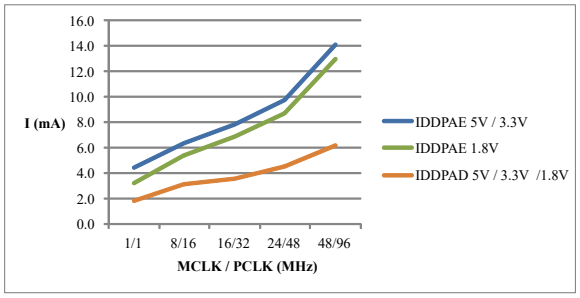

Condition:
1. TA = +25° C

Figure 19 **Active mode, a) peripherals clocks enabled, b) peripherals clocks disabled: Supply current I_{DDPA} over supply voltage V_{DDP} for different clock frequencies**

Figure 20 shows typical graphs for sleep mode current for V_{DDP} = 5 V, V_{DDP} = 3.3 V, V_{DDP} = 1.8 V across different clock frequencies.

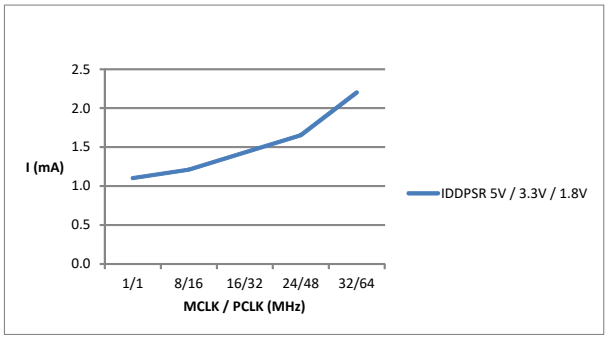

Condition:
1. TA = +25° C

Figure 20 **Sleep mode, peripherals clocks disabled, Flash powered down: Supply current I_{DDPSD} over supply voltage V_{DDP} for different clock frequencies**

Table 24 provides the active current consumption of some modules operating at 5 V power supply at 25°C. The typical values shown are used as a reference guide on the current consumption when these modules are enabled.

Table 24 **Typical Active Current parameter table**

Active Current Consumption	Symbol	Limit Values	Unit	Note/Test Condition
		Typ.		
Baseload current	I_{CPUDDC}	4.14	mA	Modules including Core, SCU, PORT, memories, ANATOP[1)]
VADC and SHS	I_{ADCDDC}	3.73	mA	Set CGATCLR0.VADC to 1[2)]
USICx	$I_{USIC0DDC}$	1.35	mA	Set CGATCLR0.USIC0 to 1[3)]
CCU4x	$I_{CCU40DDC}$	0.99	mA	Set CGATCLR0.CCU40 to 1[4)]
CCU8x	$I_{CCU80DDC}$	1.00	mA	Set CGATCLR0.CCU80 to 1[5)]
POSIFx	$I_{PIF0DDC}$	1.05	mA	Set CGATCLR0.POSIF0 to 1[6)]
LEDTSx	$I_{LTSxDDC}$	1.14	mA	Set CGATCLR0.LEDTSx to 1[7)]
BCCU0	$I_{BCCU0DDC}$	0.29	mA	Set CGATCLR0.BCCU0 to 1[8)]
MATH	$I_{MATHDDC}$	0.50	mA	Set CGATCLR0.MATH to 1[9)]
WDT	I_{WDTDDC}	0.03	mA	Set CGATCLR0.WDT to 1[10)]
RTC	I_{RTCDDC}	0.01	mA	Set CGATCLR0.RTC to 1[11)]
MultiCAN	$I_{MCANDDC}$	1.38	mA	Set CGATCLR0.MCAN0 to 1[12)]

1) Baseload current is measured with device running in user mode, MCLK=PCLK=48 MHz, with an endless loop in the flash memory. The clock to the modules stated in CGATSTAT0 are gated.
2) Active current is measured with: module enabled, MCLK=48 MHz, running in auto-scan conversion mode.
3) Active current is measured with: module enabled, each of the 2 USIC channels sending alternate messages at 57.6 kbaud every 200 ms.
4) Active current is measured with: module enabled, MCLK=PCLK=48 MHz, 1 CCU4 slice for PWM switching at 20 kHz with duty cycle varying at 10%-90%, 1 CCU4 slice in capture mode for reading period and duty cycle.
5) Active current is measured with: module enabled, MCLK=PCLK=48 MHz, 3 CCU8 slices with PWM frequency at 20 kHz and a period match interrupt used to toggle duty cycle between 10% and 90%.
6) Active current is measured with: module enabled, MCLK=48 MHz, PCLK=96 MHz, hall sensor mode.

7) Active current is measured with: module enabled, MCLK=48 MHz, 1 LED column, 6 LED/TS lines, Pad Scheme A with large pad hysteresis config, time slice duration = 1.048 ms.
8) Active current is measured with: module enabled, MCLK=48 MHz, PCLK=96 MHz, FCLK=0.8 MHz, Normal mode (BCCU clock = FCLK/4), 4 BCCU Channels with packers enabled and 1 Dimming Engine, change color or dim every 1 s.
9) Active current is measured with: module enabled, MCLK=48 MHz, PCLK=96 MHz, tangent calculation in while loop; CORDIC circular rotation, no keep, autostart; 32-by-32 bit signed DIV, autostart, DVS right shift by 11.
10) Active current is measured with: module enabled, MCLK=48 MHz, time-out mode; WLB = 0, WUB = 0x00008000; WDT serviced every 1 s.
11) Active current is measured with: module enabled, MCLK=48 MHz, Periodic interrupt enabled.
12) Active current is measured with: module enabled, MCLK=48 MHz, running at 20 MHz baudrate generator, 1 node activated, 1 transmit and 1 receive object active.

3.2.8 Flash Memory Parameters

***Note**: These parameters are not subject to production test, but verified by design and/or characterization.*

Table 25 Flash Memory Parameters

Parameter	Symbol	Values			Unit	Note/Test Condition
		Min.	Typ.	Max.		
Erase time per page/sector	t_{ERASE} CC	6.8	7.1	7.6	ms	
Program time per block	t_{PSER} CC	102	152	204	µs	
Wake-Up time	t_{WU} CC	–	32.2	–	µs	
Read time per word	t_a CC	–	50	–	ns	
Data Retention Time	t_{RET} CC	10	–	–	years	Max. 100 erase/program cycles
Flash Wait States[1)]	$N_{WSFLASH}$ CC	0	0	0		f_{MCLK} = 8 MHz
		0	1	1		f_{MCLK} = 16 MHz
		1	2	2		f_{MCLK} = 32 MHz
		2	2	3		f_{MCLK} = 48 MHz
Erase Cycles	N_{ECYC} CC	–	–	$5*10^4$	cycles	Sum of page and sector erase cycles
Total Erase Cycles	N_{TECYC} CC	–	–	$2*10^6$	cycles	

1) Flash wait states are automatically inserted by the Flash module during memory read when needed. Typical values are calculated from the execution of the Dhrystone benchmark program.

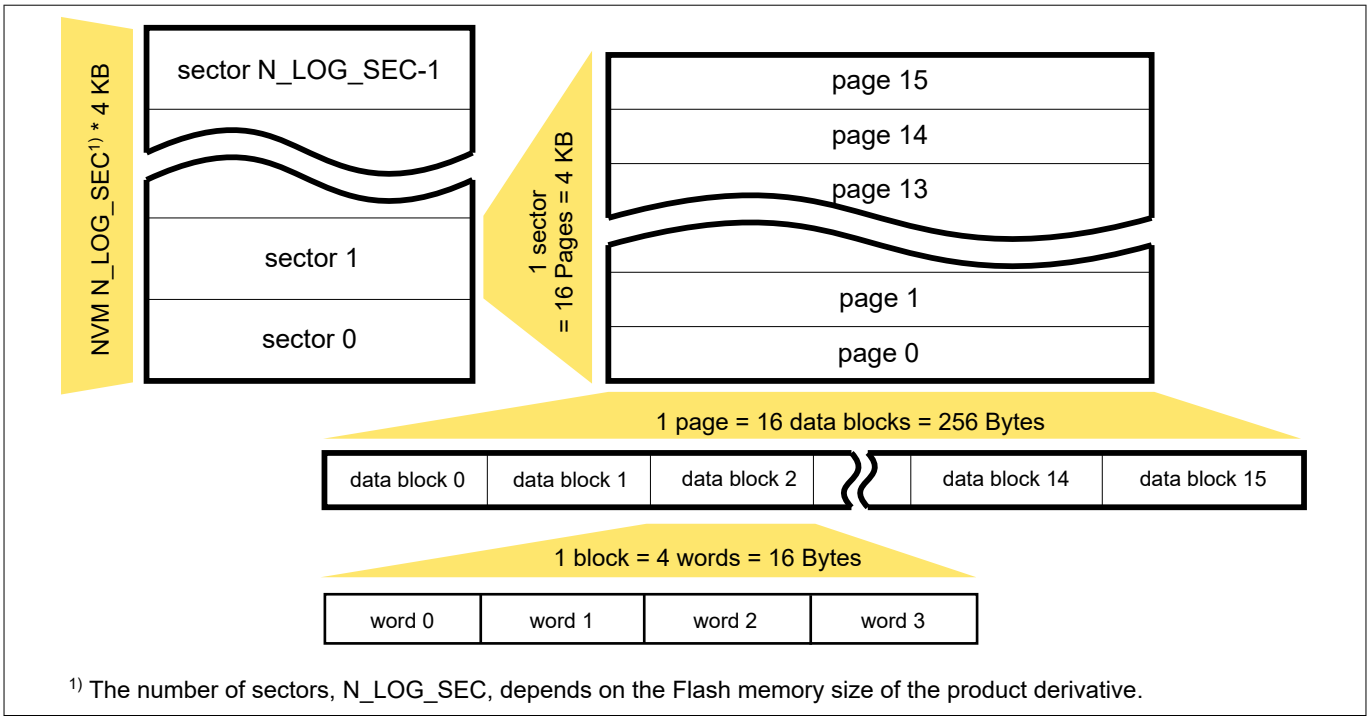

Figure 21 **Logical Structure of the Flash**

3.3 AC Parameters

3.3.1 Testing Waveforms

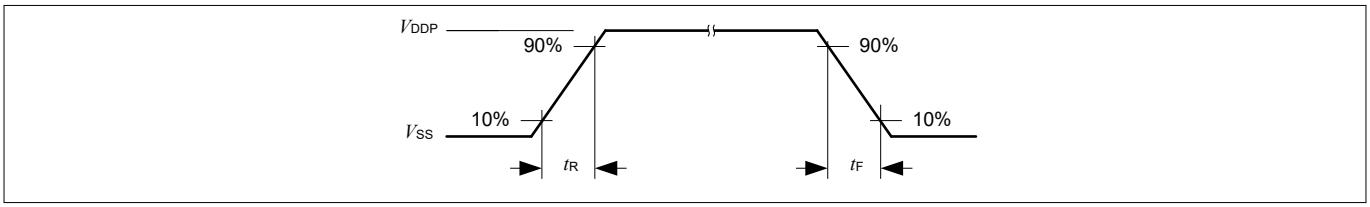

Figure 22 **Rise/Fall Time Parameters**

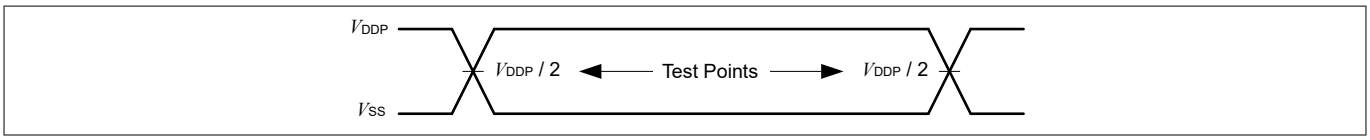

Figure 23 **Testing Waveform, Output Delay**

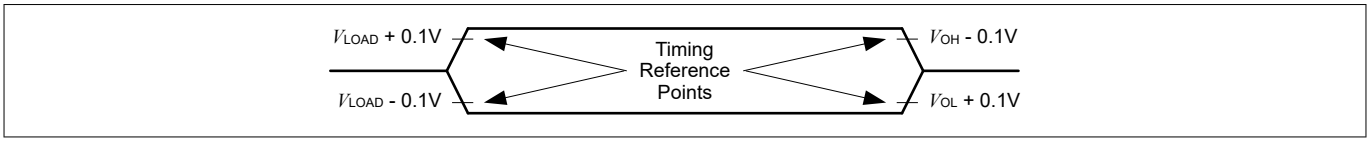

Figure 24 **Testing Waveform, Output High Impedance**

3.3.2 Power-Up and Supply Threshold Characteristics

Table 26 provides the characteristics of the supply threshold in XMC1400.

The guard band between the lowest valid operating voltage and the brownout reset threshold provides a margin for noise immunity and hysteresis. The electrical parameters may be violated while V_{DDP} is outside its operating range.

The brownout detection triggers a reset within the defined range. The prewarning detection can be used to trigger an early warning and issue corrective and/or fail-safe actions in case of a critical supply voltage drop.

***Note**: These parameters are not subject to production test, but verified by design and/or characterization.*

Table 26 Power-Up and Supply Threshold Parameters (Operating Conditions apply)

Parameter	Symbol	Values			Unit	Note/Test Condition
		Min.	Typ.	Max.		
V_{DDP} ramp-up time	t_{RAMPUP} SR	V_{DDP}/ $S_{VDDPrise}$	–	10^7	µs	
V_{DDP} slew rate	S_{VDDPOP} SR	0	–	0.1	V/µs	Slope during normal operation
	S_{VDDP10} SR	0	–	10	V/µs	Slope during fast transient within +/-10% of V_{DDP}
	$S_{VDDPrise}$ SR	0	–	10	V/µs	Slope during power-on or restart after brownout event
	$S_{VDDPfall}$[1] SR	0	–	0.25	V/µs	Slope during supply falling out of the +/-10% limits[2]
V_{DDP} prewarning voltage	V_{DDPPW} CC	2.1	2.25	2.4	V	ANAVDEL.VDEL_SELECT = 00_B
		2.85	3	3.15	V	ANAVDEL.VDEL_SELECT = 01_B
		4.2	4.4	4.6	V	ANAVDEL.VDEL_SELECT = 10_B
V_{DDP} brownout reset voltage	V_{DDPBO} CC	1.55	1.62	1.75	V	calibrated, before user code starts running
V_{DDP} voltage to ensure defined pad states	V_{DDPPA} CC	–	1.0	–	V	
Start-up time from power-on reset	t_{SSW} SR	–	260	–	µs	Time to the first user code instruction[3]
BMI program time	t_{BMI} SR	–	8.25	–	ms	Time taken from a user-triggered system reset after BMI installation is requested

1) A capacitor of at least 100 nF has to be added between V_{DDP} and V_{SSP} to fulfill the requirement as stated for this parameter.
2) Valid for a 100 nF buffer capacitor connected to supply pin where current from capacitor is forwarded only to the chip. A larger capacitor value has to be chosen if the power source sink a current.

3) This values does not include the ramp-up time. During start-up firmware execution, MCLK is running at 48 MHz and the clocks to peripheral as specified in register CGATSTAT0 are gated.

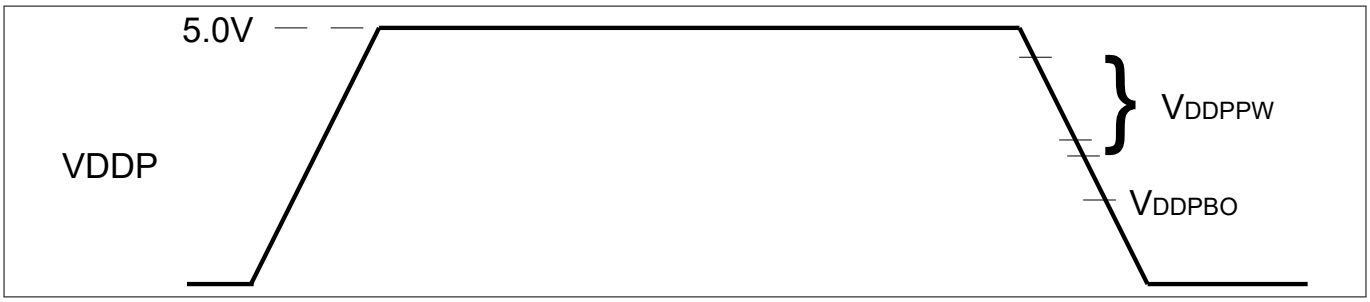

Figure 25 **Supply Threshold Parameters**

3.3.3 On-Chip Oscillator Characteristics

Table 27 provides the characteristics of the 96 MHz digital controlled oscillator DCO1.

***Note**: These parameters are not subject to production test, but verified by design and/or characterization.*

Table 27 **96 MHz DCO1 Characteristics (Operating Conditions apply)**

Parameter	Symbol	Limit Values			Unit	Note/Test Condition
		Min.	Typ.	Max.		
Nominal frequency	f_{NOM} CC	–	96	–	MHz	under nominal conditions[1] after trimming
Accuracy with adjustment based on XTAL as reference	Δf_{LTX} CC	-0.3	–	0.3	%	with respect to f_{NOM}(typ), over temperature (-40°C to 105°C)
Accuracy	Δf_{LT} CC	-1.7	–	3.4	%	with respect to f_{NOM}(typ), over temperature (0°C to 85°C)
		-3.9	–	4.0	%	with respect to f_{NOM}(typ), over temperature (-40°C to 105°C)

1) The deviation is relative to the factory trimmed frequency at nominal V_{DDC} and T_A = + 25°C.

Table 28 provides the characteristics of the 32 kHz digital controlled oscillator DCO2.

Table 28 **32 kHz DCO2 Characteristics (Operating Conditions apply)**

Parameter	Symbol	Limit Values			Unit	Note/Test Condition
		Min.	Typ.	Max.		
Nominal frequency	f_{NOM} CC	–	32.75	–	kHz	under nominal conditions[1] after trimming
Accuracy	Δf_{LT} CC	-1.7	–	3.4	%	with respect to f_{NOM}(typ), over temperature (0°C to 85°C)
		-3.9	–	4.0	%	with respect to f_{NOM}(typ), over temperature (-40°C to 105°C)[1]

1) The deviation is relative to the factory trimmed frequency at nominal V_{DDC} and T_A = + 25°C.

3.3.4 Serial Wire Debug Port (SW-DP) Timing

The following parameters are applicable for communication through the SW-DP interface.

***Note**: These parameters are not subject to production test, but verified by design and/or characterization.*

Table 29 SWD Interface Timing Parameters(Operating Conditions apply)

Parameter	Symbol	Values			Unit	Note/Test Condition
		Min.	Typ.	Max.		
SWDCLK high time	t_1 SR	50	–	500000	ns	–
SWDCLK low time	t_2 SR	50	–	500000	ns	–
SWDIO input setup to SWDCLK rising edge	t_3 SR	10	–	–	ns	–
SWDIO input hold after SWDCLK rising edge	t_4 SR	10	–	–	ns	–
SWDIO output valid time after SWDCLK rising edge	t_5 CC	–	–	68	ns	C_L = 50 pF
		–	–	62	ns	C_L = 30 pF
SWDIO output hold time from SWDCLK rising edge	t_6 CC	4	–	–	ns	

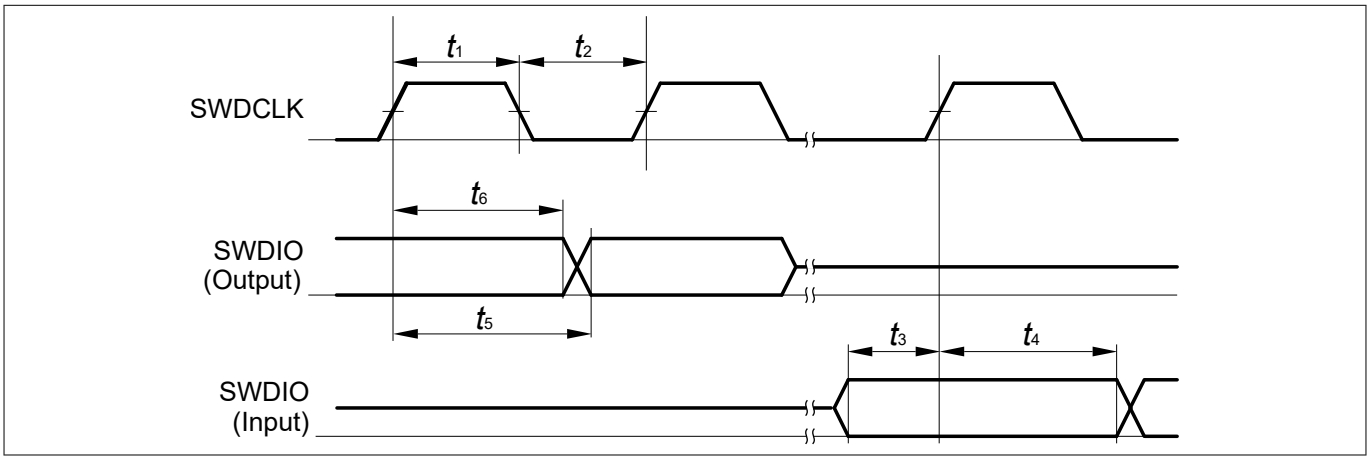

Figure 26 SWD Timing

3.3.5 SPD Timing Requirements

The optimum SPD decision time between 0_B and 1_B is 0.75 µs. With this value the system has maximum robustness against frequency deviations of the sampling clock on tool and on device side. However it is not always possible to exactly match this value with the given constraints for the sample clock. For instance for a oversampling rate of 4, the sample clock will be 8 MHz and in this case the closest possible effective decision time is 5.5 clock cycles (0.69 µs).

Table 30 Optimum Number of Sample Clocks for SPD

Sample Freq.	Sampling Factor	Sample Clocks 0_B	Sample Clocks 1_B	Effective Decision Time[1)]	Remark
8 MHz	4	1 to 5	6 to 12	0.69 µs	The other closest option (0.81 µs) for the effective decision time is less robust.

1) Nominal sample frequency period multiplied with 0.5 + (max. number of 0_B sample clocks).

For a balanced distribution of the timing robustness of SPD between tool and device, the timing requirements for the tool are:

- Frequency deviation of the sample clock is +/- 5%
- Effective decision time is between 0.69 µs and 0.75 µs (calculated with nominal sample frequency)

3.3.6 Peripheral Timings

***Note**: These parameters are not subject to production test, but verified by design and/or characterization.*

3.3.6.1 Synchronous Serial Interface (USIC SSC) Timing

The following parameters are applicable for a USIC channel operated in SSC mode.

***Note**: Operating Conditions apply.*

Table 31 USIC SSC Master Mode Timing

Parameter	Symbol	Values			Unit	Note/Test Condition
		Min.	Typ.	Max.		
SCLKOUT master clock period	t_{CLK} CC	4/*MCLK*	–	–	ns	
Slave select output SELO active to first SCLKOUT transmit edge	t_1 CC	t_{CLK}/2 - 28	–	–	ns	
Slave select output SELO inactive after last SCLKOUT receive edge	t_2 CC	0	–	–	ns	
Data output DOUT[3:0] valid time	t_3 CC	-28	–	28	ns	
Receive data input DX0/DX[5:3] setup time to SCLKOUT receive edge	t_4 SR	75	–	–	ns	
Data input DX0/DX[5:3] hold time from SCLKOUT receive edge	t_5 SR	0	–	–	ns	

Table 32 USIC SSC Slave Mode Timing

Parameter	Symbol	Values			Unit	Note/Test Condition
		Min.	Typ.	Max.		
DX1 slave clock period	t_{CLK} SR	4/*MCLK*	–	–	ns	
Select input DX2 setup to first clock input DX1 transmit edge[1)]	t_{10} SR	16	–	–	ns	
Select input DX2 hold after last clock input DX1 receive edge[1)]	t_{11} SR	17	–	–	ns	
Receive data input DX0/DX[5:3] setup time to shift clock receive edge[1)]	t_{12} SR	21	–	–	ns	
Data input DX0/DX[5:3] hold time from clock input DX1 receive edge[1)]	t_{13} SR	15	–	–	ns	
Data output DOUT[3:0] valid time	t_{14} CC	–	–	71	ns	

1) These input timings are valid for asynchronous input signal handling of slave select input, shift clock input, and receive data input (bits DXnCR.DSEN = 0).

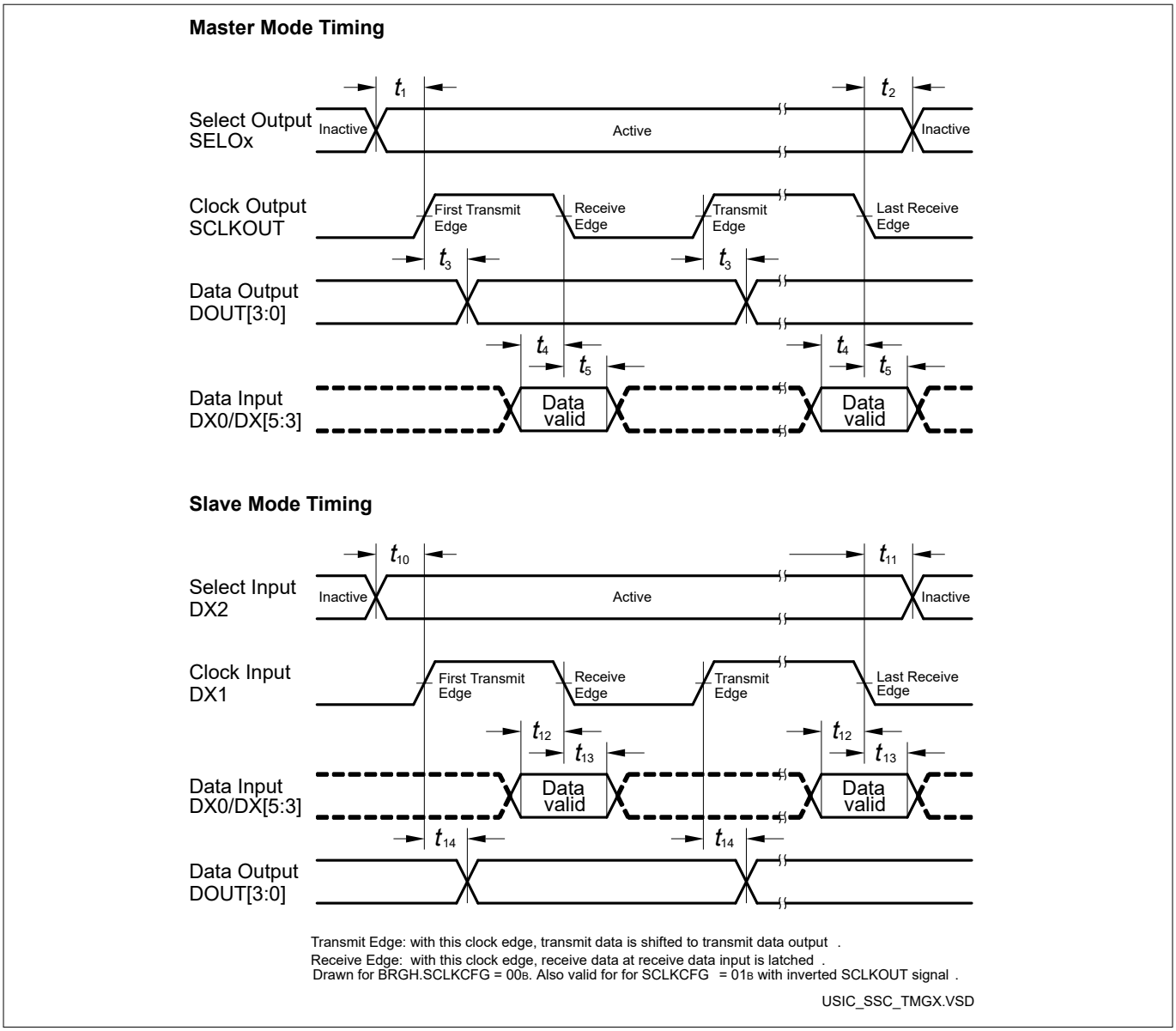

Figure 27 **USIC - SSC Master/Slave Mode Timing**

Note: *This timing diagram shows a standard configuration, for which the slave select signal is low-active, and the serial clock signal is not shifted and not inverted.*

3.3.6.2 Inter-IC (IIC) Interface Timing

The following parameters are applicable for a USIC channel operated in IIC mode.

***Note**: Operating Conditions apply.*

Table 33 USIC IIC Standard Mode Timing[1)]

Parameter	Symbol	Values			Unit	Note/Test Condition
		Min.	Typ.	Max.		
Fall time of both SDA and SCL	t_1 CC/SR	–	–	300	ns	
Rise time of both SDA and SCL	t_2 CC/SR	–	–	1000	ns	
Data hold time	t_3 CC/SR	0	–	–	µs	
Data set-up time	t_4 CC/SR	250	–	–	ns	
LOW period of SCL clock	t_5 CC/SR	4.7	–	–	µs	
HIGH period of SCL clock	t_6 CC/SR	4.0	–	–	µs	
Hold time for (repeated) START condition	t_7 CC/SR	4.0	–	–	µs	
Set-up time for repeated START condition	t_8 CC/SR	4.7	–	–	µs	
Set-up time for STOP condition	t_9 CC/SR	4.0	–	–	µs	
Bus free time between a STOP and START condition	t_{10} CC/SR	4.7	–	–	µs	
Capacitive load for each bus line	C_b SR	–	–	400	pF	

1) Due to the wired-AND configuration of an IIC bus system, the port drivers of the SCL and SDA signal lines need to operate in open-drain mode. The high level on these lines must be held by an external pull-up device, approximately 10 kOhm for operation at 100 kbit/s, approximately 2 kOhm for operation at 400 kbit/s.

Table 34 USIC IIC Fast Mode Timing[1)]

Parameter	Symbol	Values			Unit	Note/Test Condition
		Min.	Typ.	Max.		
Fall time of both SDA and SCL	t_1 CC/SR	$20 + 0.1^*C_b$[2)]	–	300	ns	
Rise time of both SDA and SCL	t_2 CC/SR	$20 + 0.1^*C_b$	–	300	ns	
Data hold time	t_3 CC/SR	0	–	–	µs	
Data set-up time	t_4 CC/SR	100	–	–	ns	
LOW period of SCL clock	t_5 CC/SR	1.3	–	–	µs	
HIGH period of SCL clock	t_6 CC/SR	0.6	–	–	µs	
Hold time for (repeated) START condition	t_7 CC/SR	0.6	–	–	µs	
Set-up time for repeated START condition	t_8 CC/SR	0.6	–	–	µs	
Set-up time for STOP condition	t_9 CC/SR	0.6	–	–	µs	

(table continues...)

Table 34 (continued) USIC IIC Fast Mode Timing[1)]

Parameter	Symbol	Values			Unit	Note/Test Condition
		Min.	Typ.	Max.		
Bus free time between a STOP and START condition	t_{10} CC/SR	1.3	–	–	µs	
Capacitive load for each bus line	C_b SR	–	–	400	pF	

1) Due to the wired-AND configuration of an IIC bus system, the port drivers of the SCL and SDA signal lines need to operate in open-drain mode. The high level on these lines must be held by an external pull-up device, approximately 10 kOhm for operation at 100 kbit/s, approximately 2 kOhm for operation at 400 kbit/s.
2) C_b refers to the total capacitance of one bus line in pF.

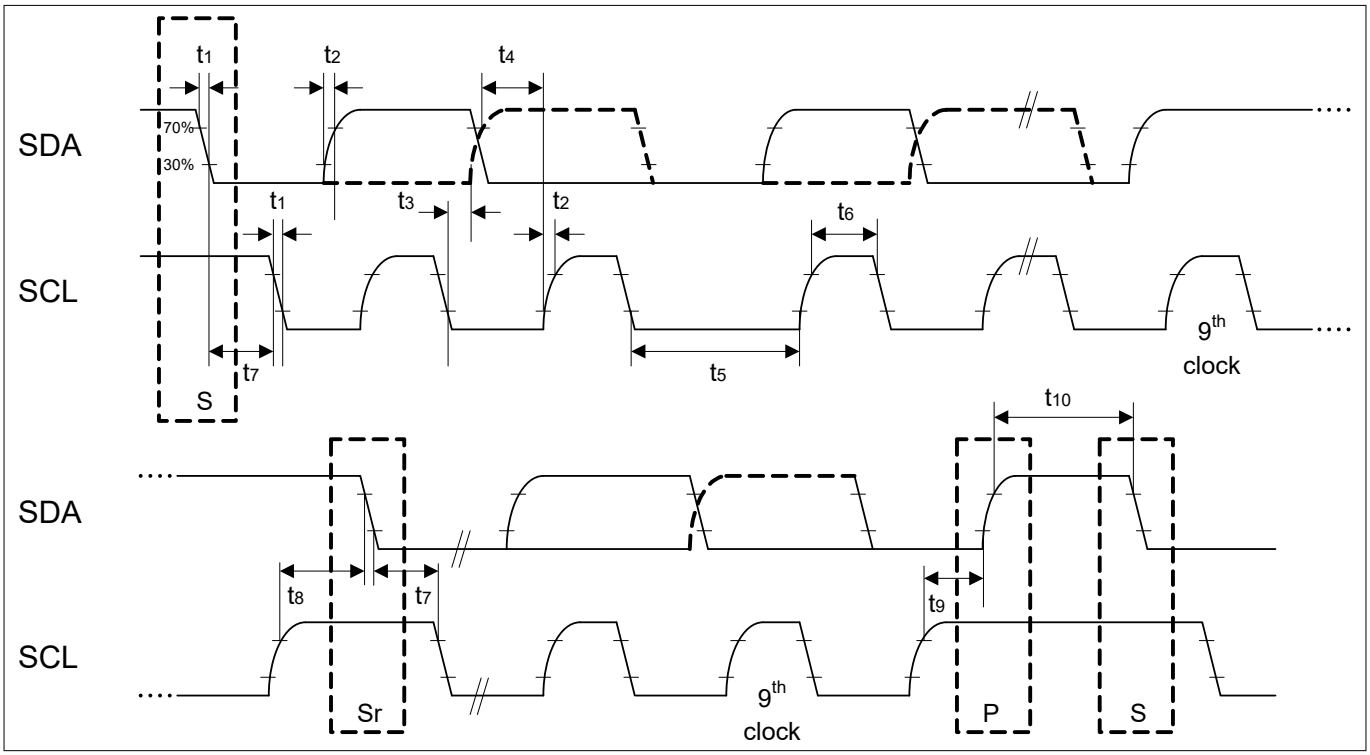

Figure 28 USIC IIC Timing

3.3.6.3 Inter-IC Sound (IIS) Interface Timing

The following parameters are applicable for a USIC channel operated in IIS mode.

***Note**: Operating Conditions apply.*

Table 35 USIC IIS Master Transmitter Timing

Parameter	Symbol	Values			Unit	Note/Test Condition
		Min.	Typ.	Max.		
Clock period	t_1 CC	$4/f_{MCLK}$	–	–	ns	
Clock HIGH	t_2 CC	$0.35 \times t_{1min}$	–	–	ns	
Clock Low	t_3 CC	$0.35 \times t_{1min}$	–	–	ns	
Hold time	t_4 CC	0	–	–	ns	
Clock rise time	t_5 CC	–	–	$0.15 \times t_{1min}$	ns	

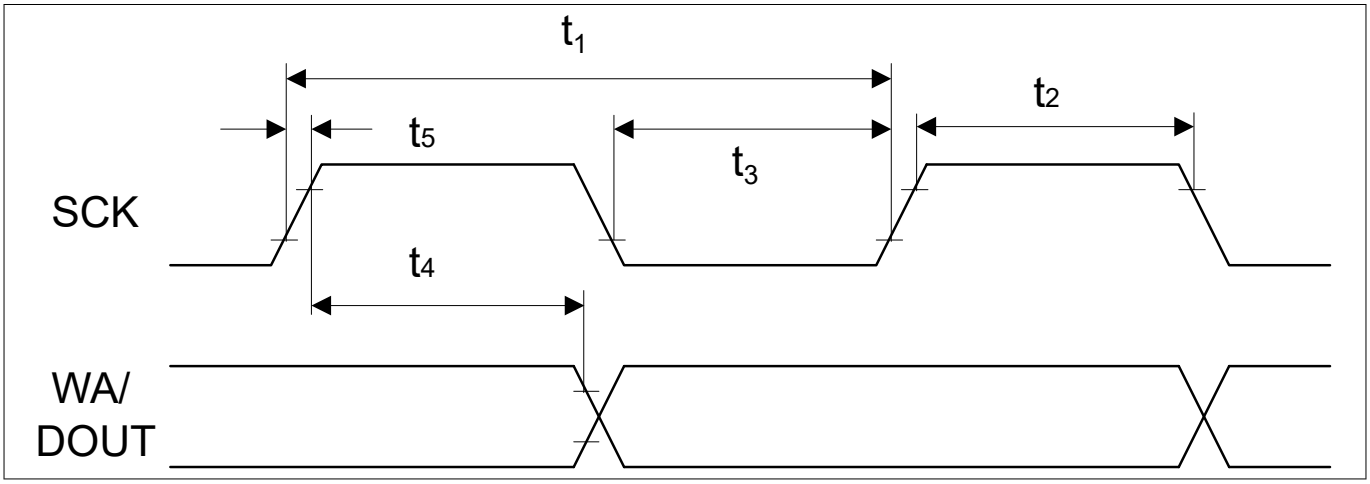

Figure 29 USIC IIS Master Transmitter Timing

Table 36 USIC IIS Slave Receiver Timing

Parameter	Symbol	Values			Unit	Note/Test Condition
		Min.	Typ.	Max.		
Clock period	t_6 SR	$4/f_{MCLK}$	–	–	ns	
Clock HIGH	t_7 SR	$0.35 \times t_{6min}$	–	–	ns	
Clock Low	t_8 SR	$0.35 \times t_{6min}$	–	–	ns	
Set-up time	t_9 SR	$0.3 \times t_{6min}$	–	–	ns	
Hold time	t_{10} SR	15	–	–	ns	

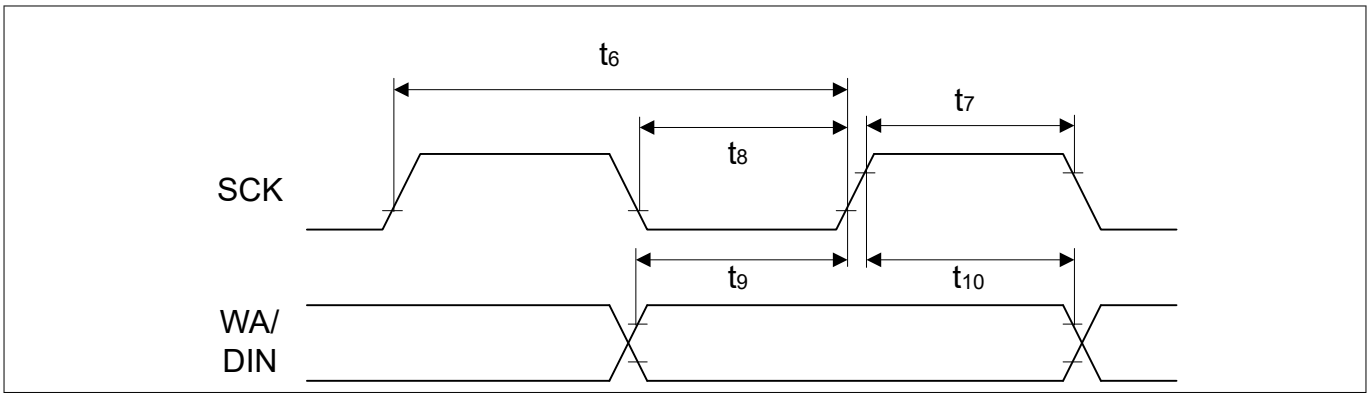

Figure 30 USIC IIS Slave Receiver Timing

4 Package and Reliability

The XMC1400 is a member of the XMC1000 Family of microcontrollers. It is also compatible to a certain extent with members of similar families or subfamilies.

Each package is optimized for the device it houses. Therefore, there may be slight differences between packages of the same pin-count but for different device types. In particular, the size of the exposed die pad may vary.

If different device types are considered or planned for an application, it must be ensured that the board layout fits all packages under consideration.

4.1 Package Parameters

Table 37 provides the thermal characteristics of the packages used in XMC1400.

Table 37 Thermal Characteristics of the Packages

Parameter	Symbol	Limit Values		Unit	Package Types
		Min.	Max.		
Exposed Die Pad Dimensions	Ex × Ey CC	–	3.7 × 3.7	mm	PG-VQFN-40-17
		–	4.2 × 4.2	mm	PG-VQFN-48-73
		–	4.6 × 4.6	mm	PG-VQFN-64-6
Thermal resistance Junction-Ambient	$R_{\Theta JA}$ CC	–	86.0	K/W	PG-TSSOP-38-9[1)]
		–	45.3	K/W	PG-VQFN-40-17[1)]
		–	44.9	K/W	PG-VQFN-48-73[1)]
		–	66.7	K/W	PG-LQFP-64-26[1)]
		–	44.7	K/W	PG-VQFN-64-6[1)]
		–	TBD	K/W	PG-LQFP-48-10

1) Device mounted on a 4-layer JEDEC board (JESD 51-5); exposed pad soldered.

***Note**: For electrical reasons, it is required to connect the exposed pad to the board ground V_{SSP}, independent of EMC and thermal requirements.*

4.1.1 Thermal Considerations

When operating the XMC1400 in a system, the total heat generated in the chip must be dissipated to the ambient environment to prevent overheating and the resulting thermal damage.

The maximum heat that can be dissipated depends on the package and its integration into the target board. The “Thermal resistance $R_{\Theta JA}$” quantifies these parameters. The power dissipation must be limited so that the average junction temperature does not exceed 115°C.

The difference between junction temperature and ambient temperature is determined by

$\Delta T = (P_{INT} + P_{IOSTAT} + P_{IODYN}) \times R_{\Theta JA}$

The internal power consumption is defined as

$P_{INT} = V_{DDP} \times I_{DDP}$ (switching current and leakage current).

The static external power consumption caused by the output drivers is defined as

$P_{IOSTAT} = \Sigma((V_{DDP}-V_{OH}) \times I_{OH}) + \Sigma(V_{OL} \times I_{OL})$

The dynamic external power consumption caused by the output drivers (P_{IODYN}) depends on the capacitive load connected to the respective pins and their switching frequencies.

If the total power dissipation for a given system configuration exceeds the defined limit, countermeasures must be taken to ensure proper system operation:

- Reduce V_{DDP}, if possible in the system
- Reduce the system frequency
- Reduce the number of output pins
- Reduce the load on active output drivers

4.2 Package Outlines

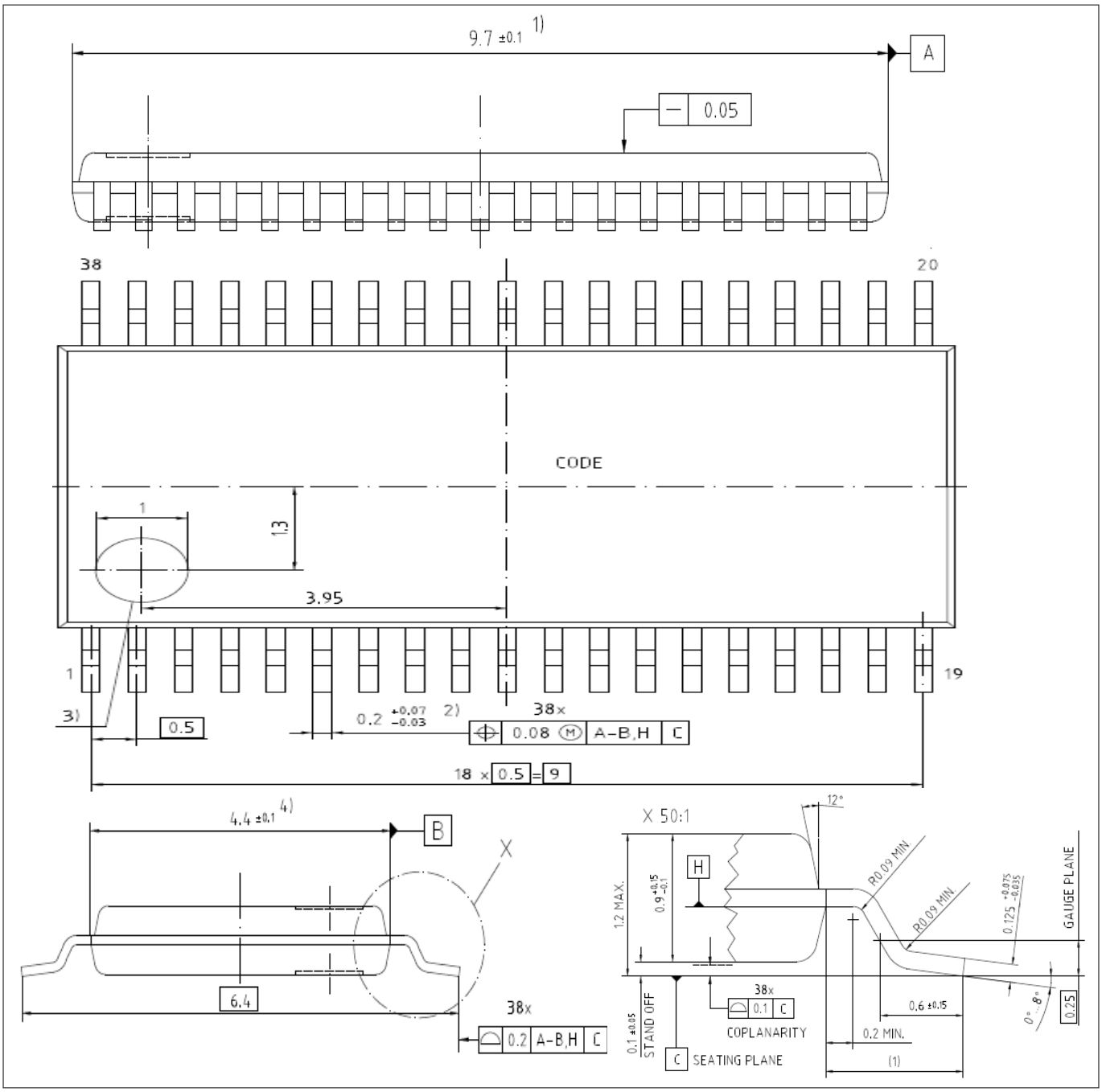

Figure 31 **PG-TSSOP-38-9**

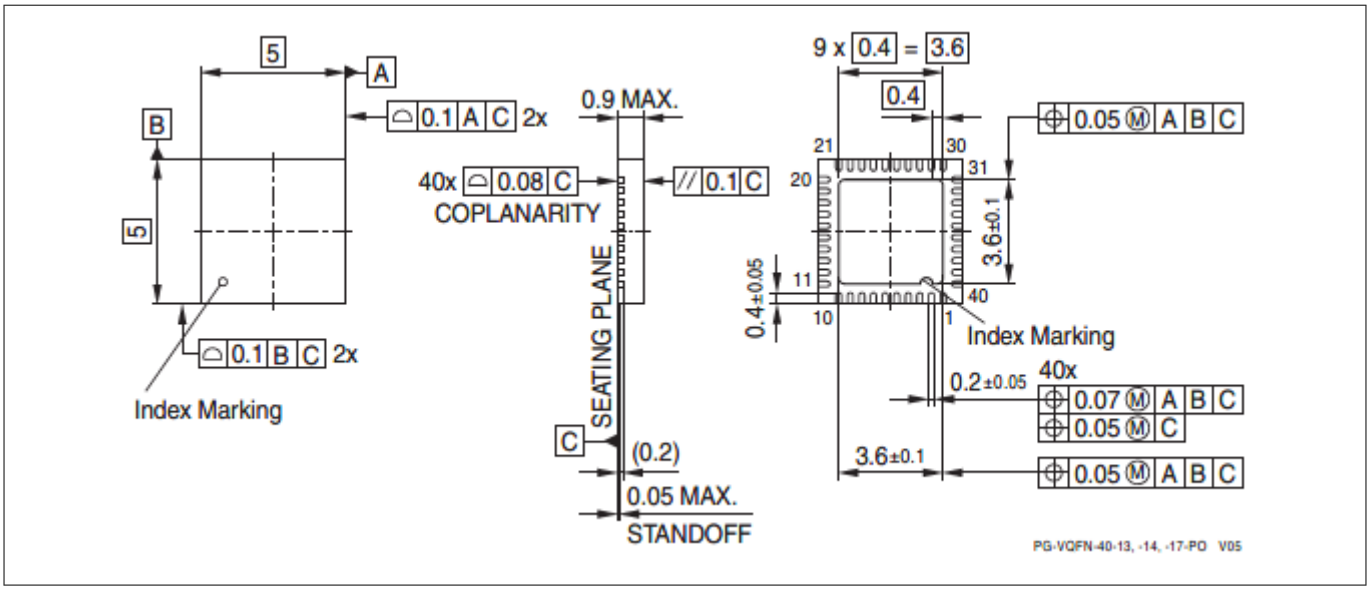

Figure 32 **PG-VQFN-40-17**

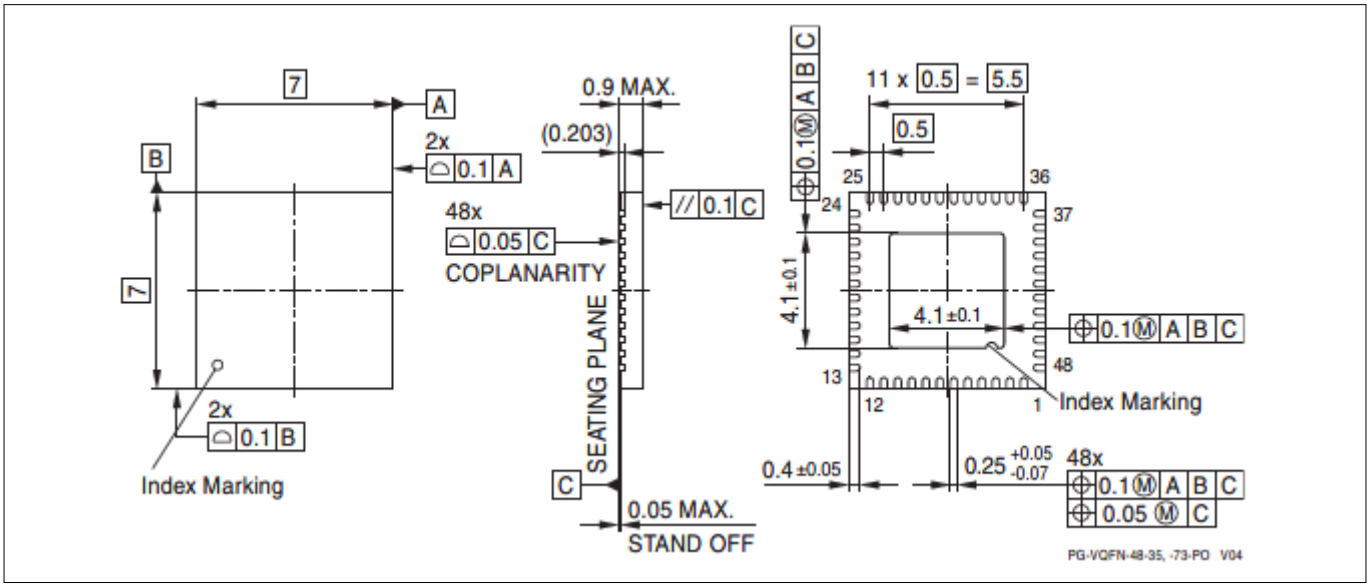

Figure 33 **PG-VQFN-48-73**

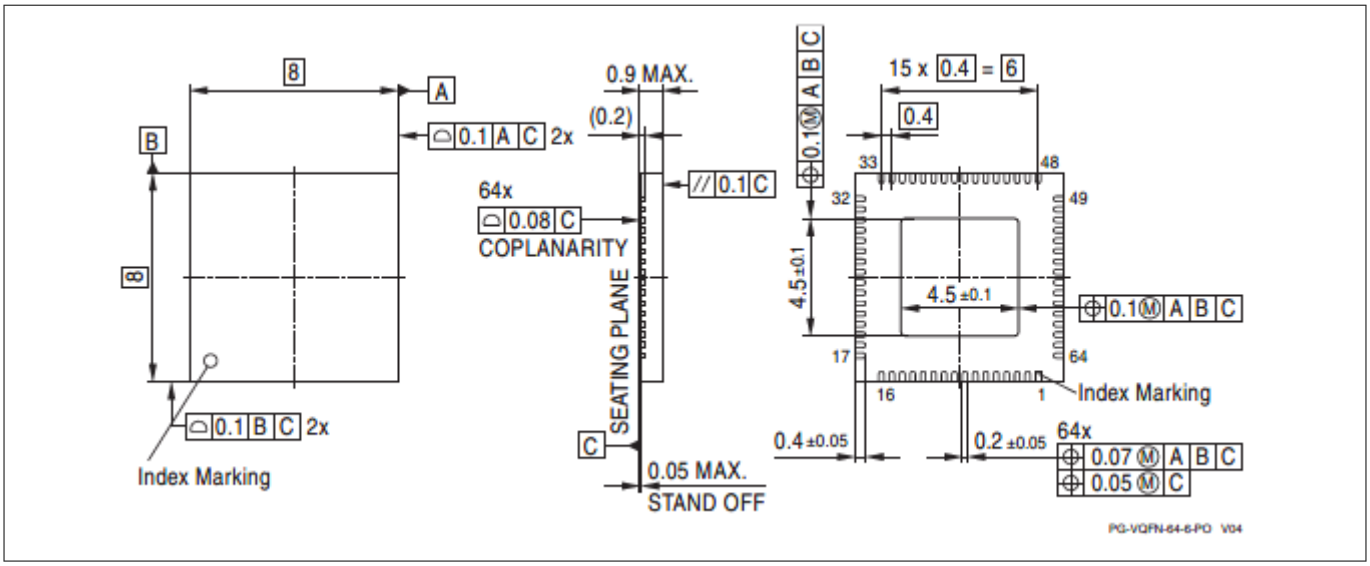

Figure 34 **PG-VQFN-64-6**

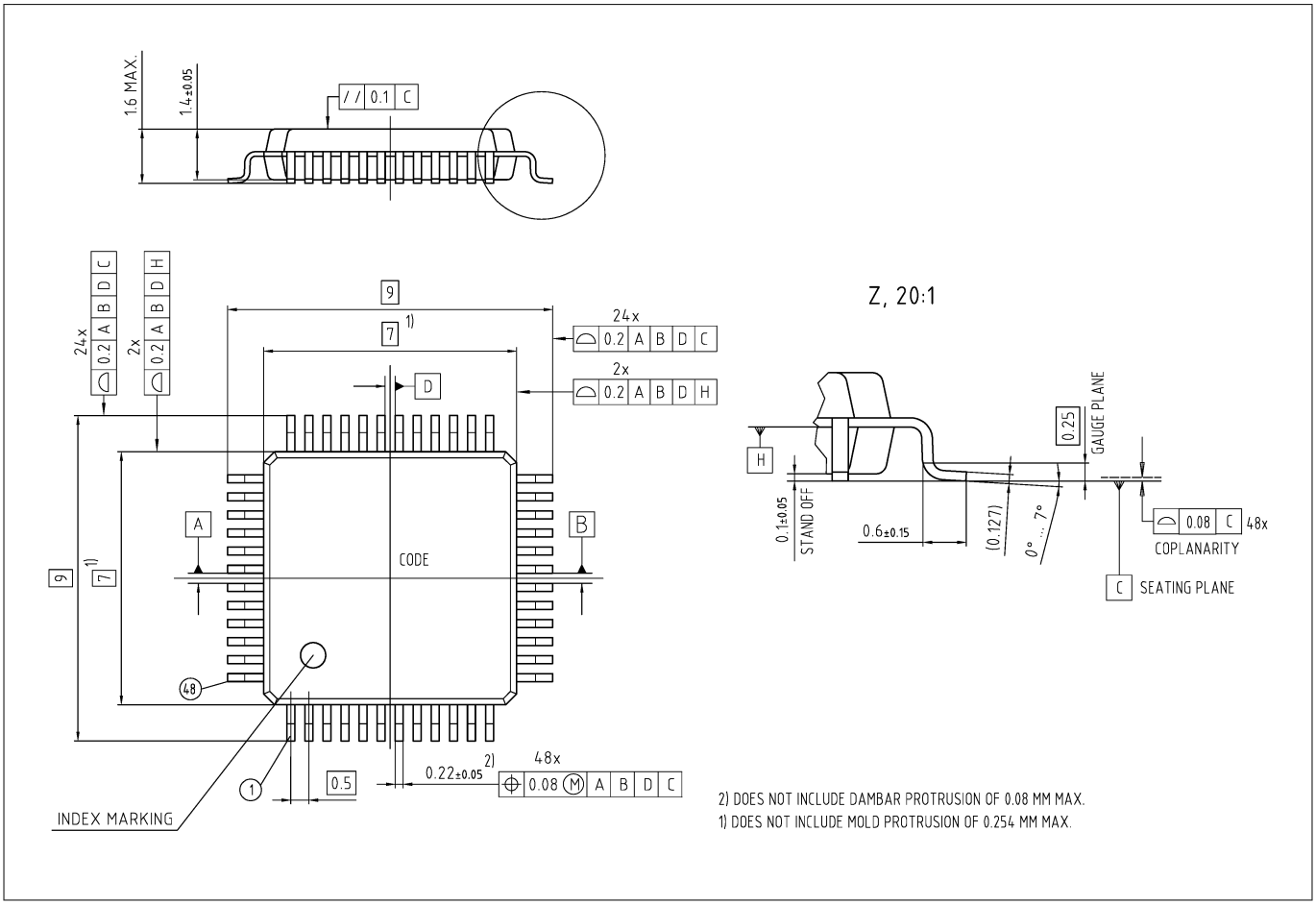

Figure 35 **PG-LQFP-48-10**

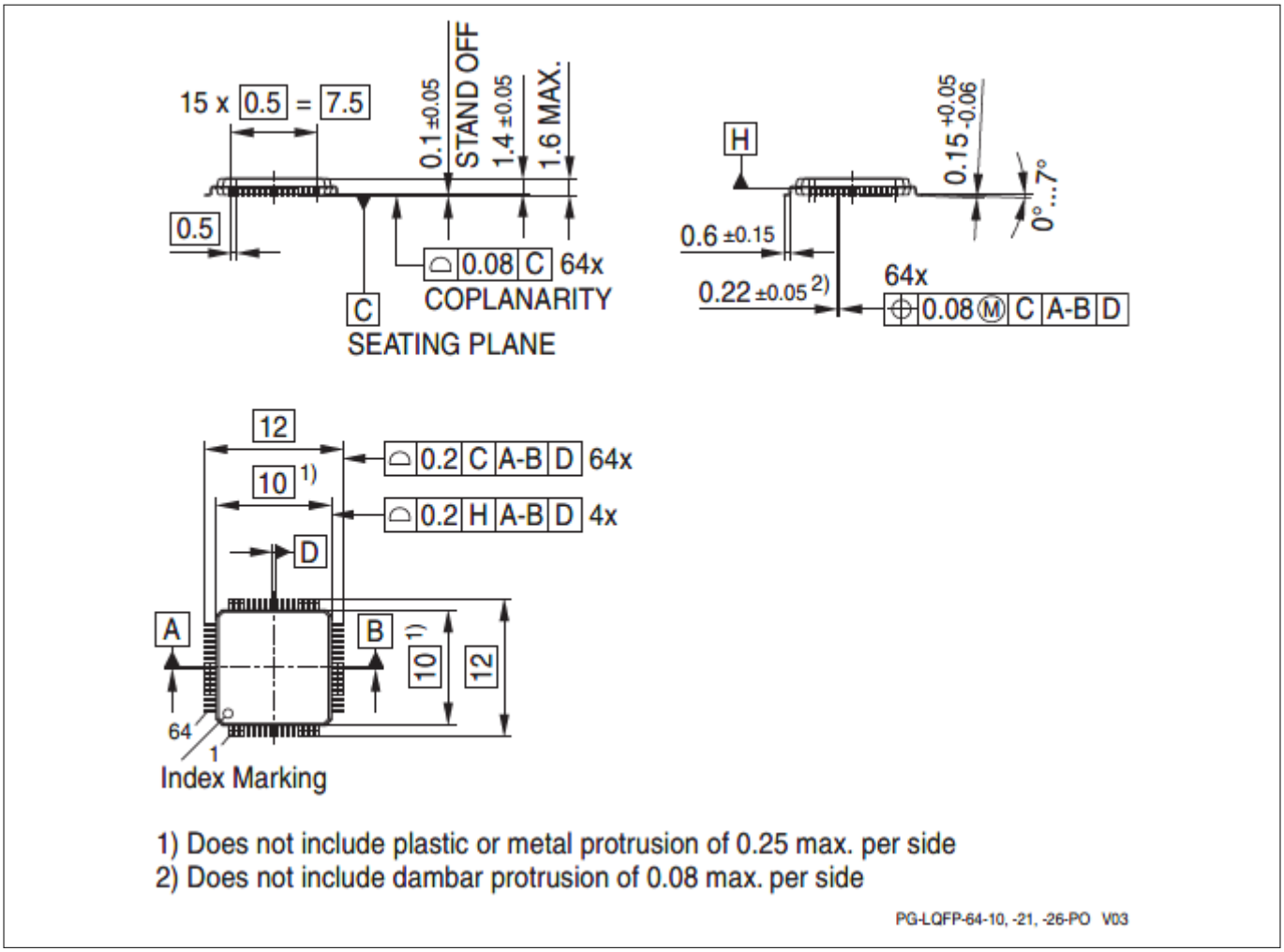

Figure 36 **PG-LQFP-64-26**

All dimensions in mm.

5 Quality Declaration

Table 38 shows the characteristics of the quality parameters in the XMC1400.

Table 38 Quality Parameters

Parameter	Symbol	Limit Values		Unit	Notes
		Min.	Max.		
ESD susceptibility according to Human Body Model (HBM)	V_{HBM} SR	–	4000	V	Conforming to EIA/ JESD22-A114-B
ESD susceptibility according to Charged Device Model (CDM) pins	V_{CDM} SR	–	1000	V	Conforming to JESD22-C101-C
Moisture sensitivity level	*MSL* CC	–	–	–	JEDEC J-STD-020D
• TSSOP-38, LQFP-64			3		
• VQFN-40, VQFN-48, VQFN-64			1		
• LQFP-48			3		
Soldering temperature	T_{SDR} SR	–	260	°C	Profile according to JEDEC J-STD-020D

Revision history

Document revision	Date	Description of changes
V1.0	2016-02	The device provides four USIC channels. XMC1401 devices available for max. ambient temperature of 85°C. Reformatted pinout table. Updated footnote to the definition of the start-up times of OSC_XTAL and RTC_XTAL oscillators. Added Δf_{LT} parameter to on-chip oscillators DCO1 and DCO2. Updated package outline drawings.
V1.1	2016-06	Added TSSOP-38-9 package Added XMC1402-T038 marking variants in TSSOP-38 Added XMC1403-Q040 marking variants
V1.2	2016-08	Added XMC™ trademark Added XMC1402-T038X0200, XMC1402-Q040X0200 and XMC1402-Q048X0200 marking variants
V1.3	2016-10	In Absolute Maximum Ratings renamed parameter V_{CM} to V_{INP2}, as the limitation is related to most P2 pins, also if no ACMP is available. Clarified limit to pins P2.[1,2,6:9,11] in Overload specification. Corrected XMC1402-T038X0200 and XMC1402-Q048X0200 marking variants in Table 2.
V1.4	2017-11	Added XMC1404-Q040 variants in Table 1 Added XMC1404-Q040 variants in Table 2 Added XMC1404-Q040 variants in Table 3
V1.5	2024-04	Updated CHIP ID - 1 bit from 0 to 1 in Table 3 Release to web
V1.6	2025-01-22	Updated template. Removed Tools from Features section. Updated Moisture sensitivity level in Quality Declaration section.
V1.7	2025-07-17	Added XMC1401, XMC1402, XMC1404 in LQFP-48 package (Table 1, Table 2, Table 3, Table 5, Figure 5, Figure 10, Figure 35). Added XMC1401 in TSSOP-38 package (Table 1, Table 2, Table 3). Updated ESD ratings in Table 38.

Trademarks

All referenced product or service names and trademarks are the property of their respective owners.

Edition 2025-07-17

Published by

Infineon Technologies AG

81726 Munich, Germany

© 2025 Infineon Technologies AG

All Rights Reserved.

Do you have a question about any aspect of this document?

Email: erratum@infineon.com

Document reference
IFX-tqk1720455942667

Important notice

The information given in this document shall in no event be regarded as a guarantee of conditions or characteristics ("Beschaffenheitsgarantie").

With respect to any examples, hints or any typical values stated herein and/or any information regarding the application of the product, Infineon Technologies hereby disclaims any and all warranties and liabilities of any kind, including without limitation warranties of non-infringement of intellectual property rights of any third party.

In addition, any information given in this document is subject to customer's compliance with its obligations stated in this document and any applicable legal requirements, norms and standards concerning customer's products and any use of the product of Infineon Technologies in customer's applications.

The data contained in this document is exclusively intended for technically trained staff. It is the responsibility of customer's technical departments to evaluate the suitability of the product for the intended application and the completeness of the product information given in this document with respect to such application.

Warnings

Due to technical requirements products may contain dangerous substances. For information on the types in question please contact your nearest Infineon Technologies office.

Except as otherwise explicitly approved by Infineon Technologies in a written document signed by authorized representatives of Infineon Technologies, Infineon Technologies' products may not be used in any applications where a failure of the product or any consequences of the use thereof can reasonably be expected to result in personal injury.