Rev	AWO #	Description	Date	Appr
-		RELEASED	9/27/21	

APPROVED: _____

DATE: _____ TITLE: _____

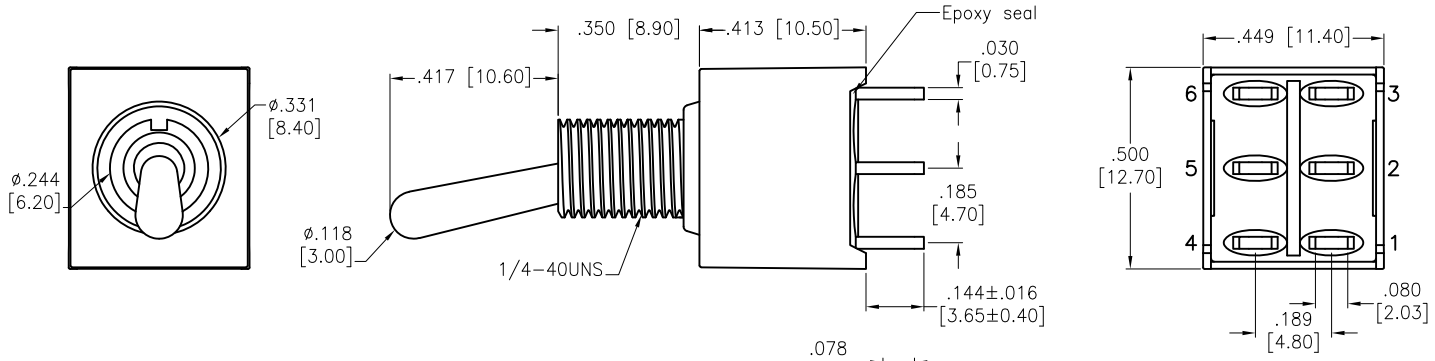

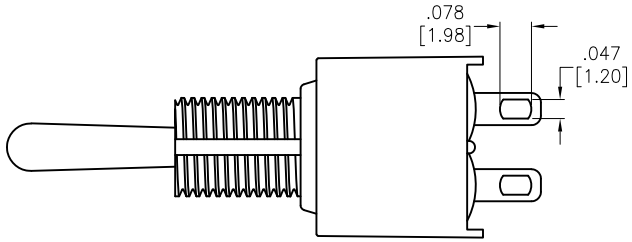

SW-T2-4B-A-T1-X-03

S=Contact Silver Plated	
G=Contact Gold Plated	

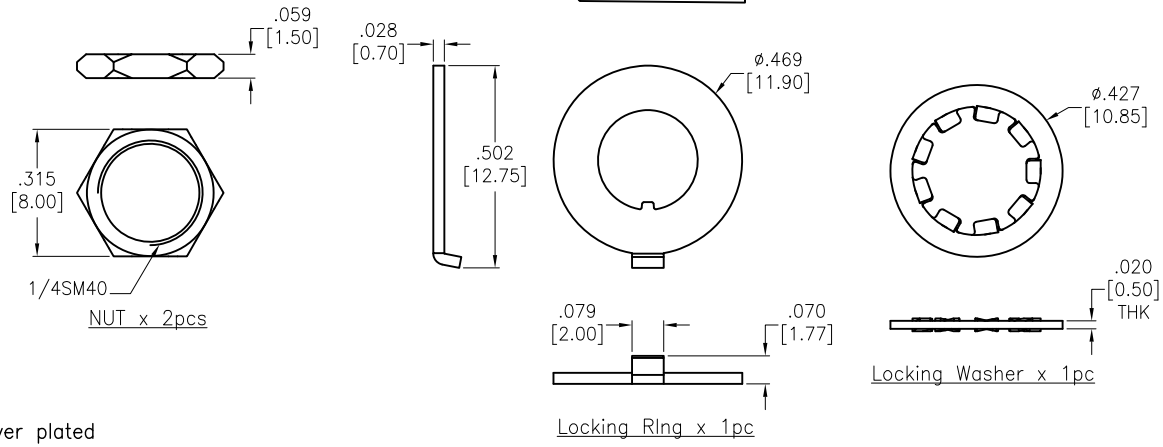

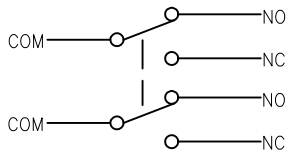

CIRCUIT DIAGRAM

(DPDT) ON-ON

SPECIFICATIONS:

Material:

Movable contact: Copper Alloy, Silver plated

Terminals: Silver plated with outer layer in Gold plating

Electrical:

Rating: 5 Amps with resistive load @ 125VAC or 28VDC

2 Amps with resistive load @ 250VAC

Contact resistance: 10 mohms max initial

Insulation resistance: 1,000 Mohms min

Dielectric withstanding voltage: 1500V RMS @ sea level

Electrical life: 50,000 make and break cycles at full load

Temperature Rating:

Operating temperature: -30°C to +85°C

Environmental:

IP Class: IP67

Lead free, RoHS compliant

RoHS COMPLIANT

UNLESS OTHERWISE SPECIFIED ALL DIMENSIONS ARE INCHES [MM]. TOLERANCES: EXCEPT AS NOTED

INCHES		HOLES	
.X	± .10	Ø.X	±.10
.XX	± .020	Ø.XX	±.015
.XXX	± .015	Ø.XXX	±.010

DRAWN	JJ	9/27/21
CHECKED	RC	9/27/21
APPROVED		

THIS DRAWING CONTAINS INFORMATION THAT IS PROPRIETARY AND SHOULD NOT BE USED WITHOUT PRIOR WRITTEN PERMISSION FROM ADAM TECH

ADAM TECH
909 Rahway Avenue,
Union, NJ 07083
Phone: 908-687-5000
Fax: 908-687-5710

TITLE: MINIATURE TOGGLE SWITCH, DPDT,ON-ON, SOLDER TYPE

SIZE	PART NO.	REV.
X	SW-T2-4B-A-T1-X-03	-

REF: S00198T | SCALE: NTS | SHEET 1 OF 1