Rev	AWO #	Description	Date	Appr
-		RELEASED	5/25/11	
A		UPDATED SHAPE.	3/23/15	HR/YC

APPROVED: _____

DATE: _____ TITLE: _____

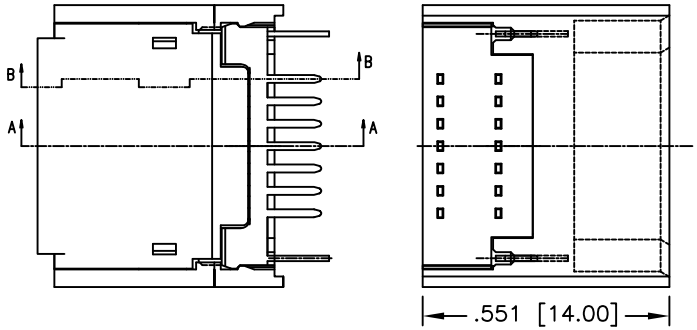

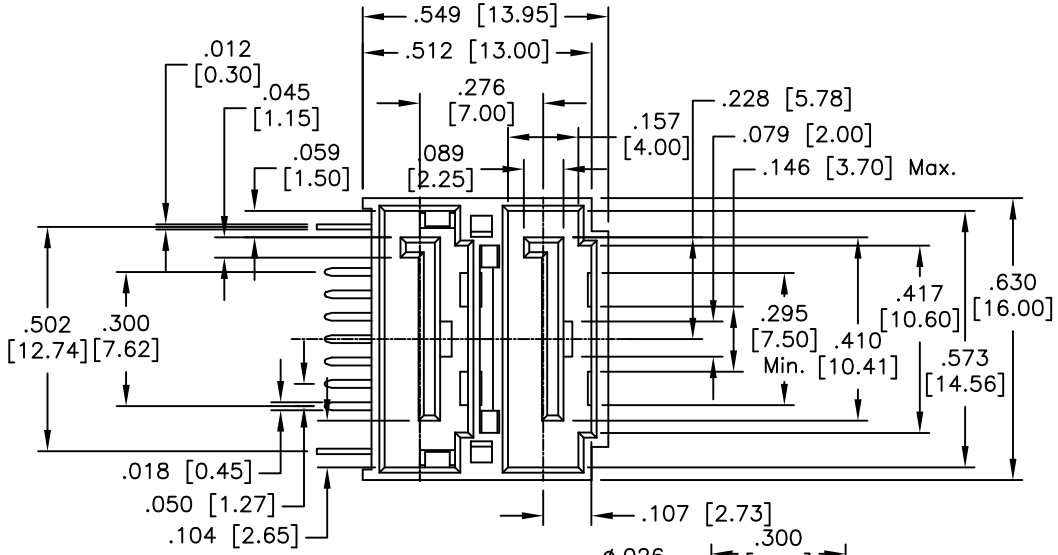

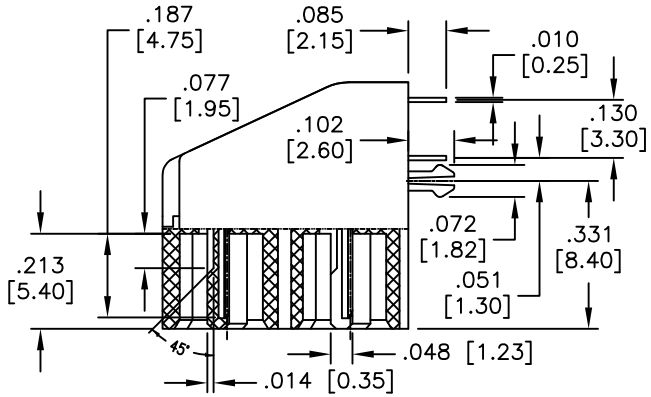

SECT A-A

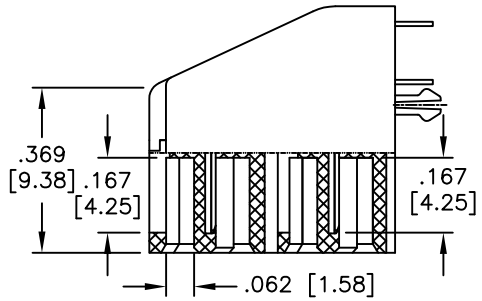

SECT B-B

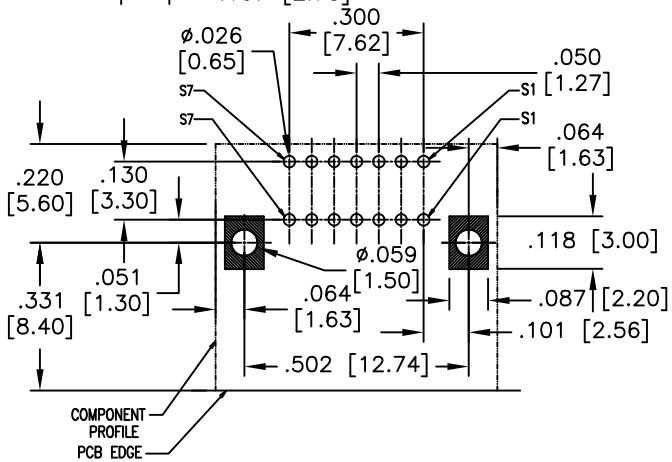

RECOMMENDED PCB LAYOUT

Signal Segment	
Name	Type
S1	GND
S2	A+
S3	A-
S4	GND
S5	B-
S6	B+
S7	GND

SPECIFICATIONS:

Material:

Insulator: Nylon66, glass reinforced, rated UL 94V-0

Insulator color: Black

Contacts: Brass

Harpoon: Brass, Tin over Nickel

Plating:

Gold flash over Nickel underplate on mating area,

Tin over Copper underplate on tails

Electrical:

Operating voltage: 100 VAC max

Current rating: 1.5 Amps max

Contact resistance: 30 mohms max

Insulation resistance: 1,000 Mohms min

Dielectric withstanding voltage: 500 VAC

Temperature Rating:

Operating temperature: -55°C to +125°C

Environmental:

Lead free, RoHS compliant

RoHS COMPLIANT

UNLESS OTHERWISE SPECIFIED
ALL DIMENSIONS ARE INCHES [MM]
TOLERANCES: EXCEPT AS NOTED

INCHES		HOLES	
.X	± .10	Ø.X	±.10
.XX	± .020	Ø.XX	±.015
.XXX	± .015	Ø.XXX	±.010

APPROVALS		DATE
DRAWN	DY	5/25/11
CHECKED		
APPROVED		

ADAM TECH

909 Rahway Avenue, Union, NJ 07083

Phone: 908-687-5000 Fax: 908-687-5710

TITLE: SATA CONNECTOR, TYPE D, MALE
14 PIN, LEFT POLARIZATION, R/A DIP TYPE

SIZE	PART NO.	REV.
X	SATA-D-PL-RT	A

REF: S00078T | SCALE: NTS | SHEET 1 OF 1