Rev	AWO #	Description	Date	Appr
-		RELEASED	12/9/04	
A		REVISED	05/11/07	

APPROVED: _____

DATE: _____ TITLE: _____

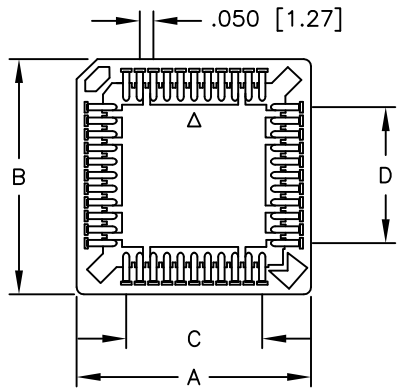

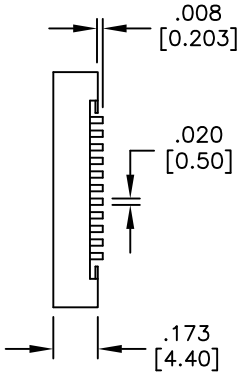

POSITIONS	A	B	C	D
20	.616 [15.65]	.616 [15.65]	.200 [5.08]	.200 [5.08]
28	.715 [18.16]	.715 [18.16]	.300 [7.62]	.300 [7.62]
32	.715 [18.16]	.817 [20.75]	.300 [7.62]	.400 [10.16]
44	.917 [23.28]	.917 [23.28]	.500 [12.70]	.500 [12.70]
52	1.017 [25.84]	1.017 [25.84]	.600 [15.24]	.600 [15.24]
68	1.219 [30.95]	1.219 [30.95]	.800 [20.32]	.800 [20.32]
84	1.417 [36.00]	1.417 [36.00]	1.000 [25.40]	1.000 [25.40]

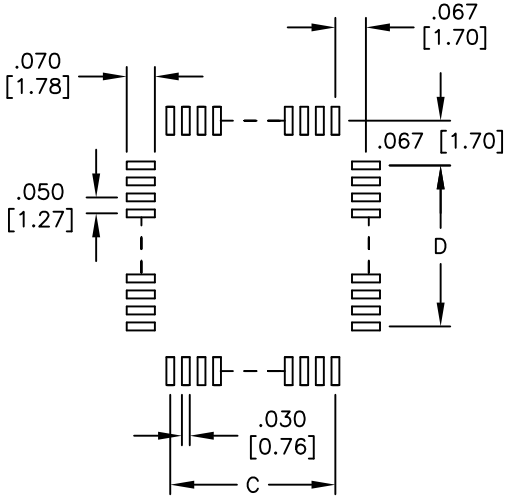

RECOMENDED
PCB LAYOUT

SPECIFICATIONS:
Material:
Insulator: Hi-temp thermoplastic, rated UL 94V-0
Insulator color: Brown
Contacts: Phosphor Bronze
Plating:
Tin over Copper underplate overall
Electrical:
Operating voltage: 250 VAC max
Current rating: 1 Amp max
Contact resistance: 30 mohms max initial
Insulation resistance: 1000 Mohms min
Dielectric withstanding voltage: 500 VAC for 1 minute
Temperature Rating:
Operating temperature: -55°C to +105°C
Environmental:
Lead free, RoHS compliant.

UNLESS OTHERWISE SPECIFIED
ALL DIMENSIONS ARE INCHES [MM]
TOLERANCES: EXCEPT AS NOTED

INCHES		HOLES	
.X	± .10	Ø.X	±.10
.XX	± .020	Ø.XX	±.015
.XXX	± .015	Ø.XXX	±.010

APPROVALS		DATE
DRAWN	SS	12/9/04
CHECKED		
APPROVED		

ADAM TECH
909 Rahway Avenue, Union, NJ 07083
Phone: 908-687-5000 Fax: 908-687-5710

TITLE: PLCC SOCKET, SURFACE MOUNT, TIN PLATED

SIZE	PART NO.	REV.
X	PLCC-XX-AT-SMT	A

REF: | SCALE: NTS | SHEET 1 OF 1