Rev	AWO #	Description	Date	Appr
-		RELEASED	9/3/15	

APPROVED: _____

DATE: _____ TITLE: _____

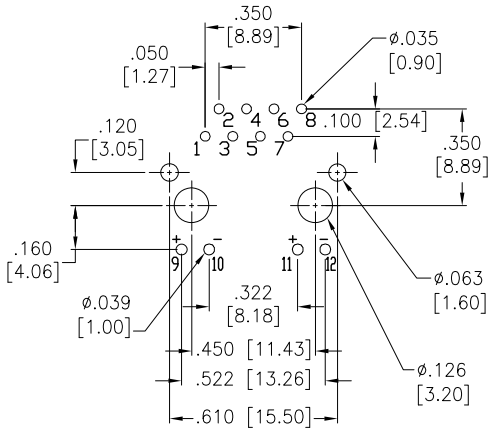

RECOMMENDED PCB LAYOUT

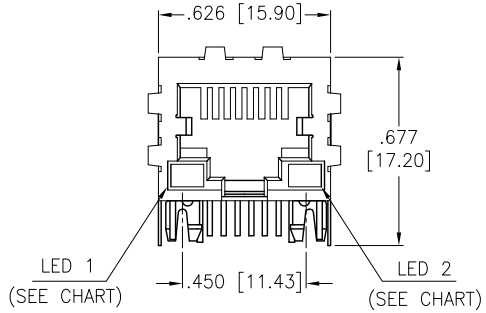

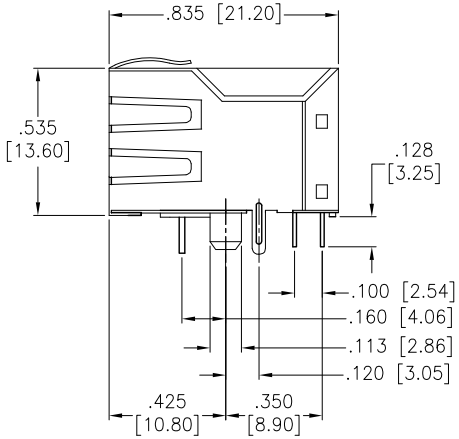

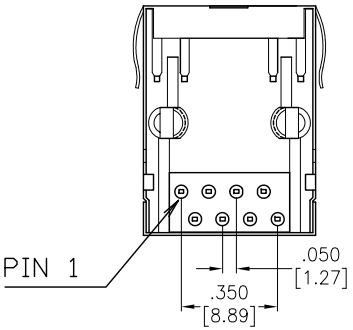

Part Number	LED 1 Color	LED 2 Color
MTJ-88GX1-FSD-PG-LD	Green	Green
MTJ-88GX1-FSD-PG-LG	Yellow	Green
MTJ-88GX1-FSD-PG-LH	Green	Yellow
MTJ-88GX1-FSD-PG-LP	Yellow/Green	Yellow/Green
MTJ-88GX1-FSD-PG-LV	Green	Yellow/Green
MTJ-88GX1-FSD-PG-L16	Green/Yellow	Green/Yellow

SPECIFICATIONS:
Material:
Insulator: PBT, Glass reinforced rated UL 94V-0
Insulator color: Black
Contacts: Phosphor Bronze
Shield: Copper Alloy, Nickel plated
Cantacts Plating:
Flat contact
Gold over Nickel underplate on contact area,
Tin over Copper underplate on solder tails
Round contact
Electrical:
Operating voltage: 150 VAC max
Current rating: 1.5 Amps max
Contact resistance: 20 mohms max
Insulation resistance: 500 Mohms min @ 500 VDC
Dielectric withstanding voltage: 1500 VAC for 1 minute
Temperature Rating:
Operating temperature: -40°C to +85°C
Environmental:
Lead free, RoHS compliant.

RoHS COMPLIANT

UNLESS OTHERWISE SPECIFIED
ALL DIMENSIONS ARE INCHES [MM]
TOLERANCES: EXCEPT AS NOTED

INCHES		HOLES	
.X	± .10	Ø.X	±.10
.XX	± .020	Ø.XX	±.015
.XXX	± .015	Ø.XXX	±.010

APPROVALS		DATE
DRAWN	AY	9/3/15
CHECKED	NC	9/3/15
APPROVED		

ADAM TECH
909 Rahway Avenue, Union, NJ 07083
Phone: 908-687-5000 Fax: 908-687-5710

TITLE: MODULAR JACK GANGED, 1 PORT, 8P8C W/ LED's

SIZE	PART NO.	REV.
X	MTJ-88GX1-FSD-PG-LX	-

REF: S00065T | SCALE: NTS | SHEET 1 OF 1