Rev	AWO #	Description	Date	Appr
-		RELEASED	12/11/13	
A		UPDATE SHAPE	8/29/14	AY/YC

APPROVED: _____

DATE: _____ TITLE: _____

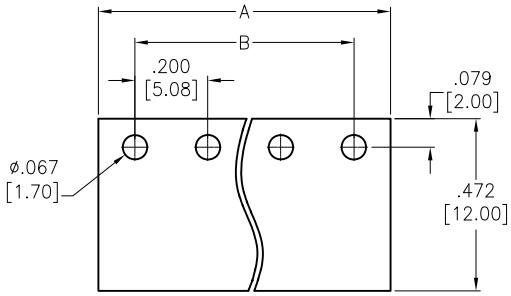

RECOMMENDED PCB LAYOUT

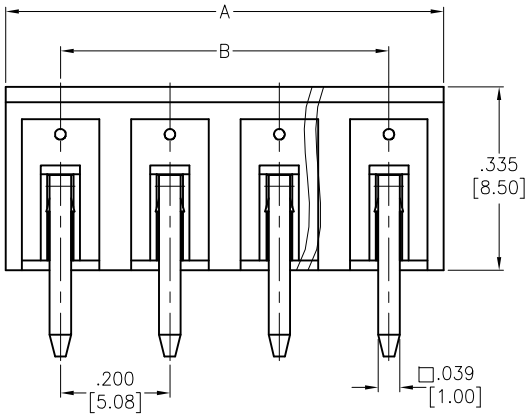

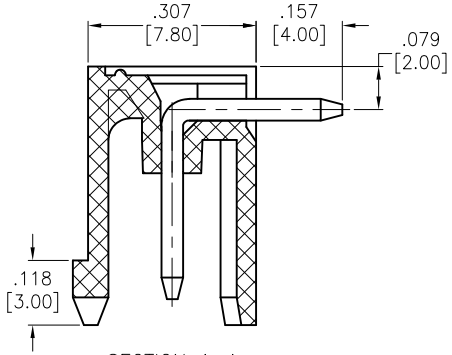

SECTION A–A

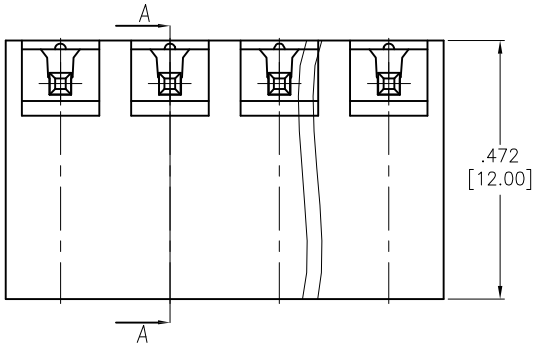

SPECIFICATIONS:

Material:

Insulator: PA66, rated UL 94V–0

Insulator color: Green

Contacts: Brass, Tin plated

Electrical:

Voltage rated: 300 VAC

Current rated: 15 Amps

Contact resistance: 20 mΩ

Insulation resistance: 500 MΩ @ 500 VDC

Withstanding valtage: 2000V AC/1 Min

Temperature Rating:

Operating temperature: –40°C to +105°C

Environmental:

Lead free, RoHS compliant.

RoHS COMPLIANT

Positions: 02 thru 24

A = .200 [5.08] x No. of Positions

B = .200 [5.08] x No. of Spaces

UNLESS OTHERWISE SPECIFIED
ALL DIMENSIONS ARE MM [INCHES]
TOLERANCES: EXCEPT AS NOTED

INCHES		HOLES	
.X	± .10	Ø.X	±.10
.XX	± .020	Ø.XX	±.015
.XXX	± .015	Ø.XXX	±.010

APPROVALS		DATE
DRAWN	AY	12/11/13
CHECKED	SL	12/11/13
APPROVED		

ADAM TECH

909 Rahway Avenue, Union, NJ 07083

Phone: 908-687-5000 Fax: 908-687-5710

TITLE .200 [5.08] PITCH, EURO BLOCK HEADER RIGHT ANGLE

SIZE	PART NO.	REV.
X	EBQA-XX-D	A

REF: S00067C | SCALE: NTS | SHEET 1 OF 1