APPROVED: _____

DATE: _____ TITLE: _____

Rev	AWO #	Description	Date	Appr
-		RELEASED	4/28/05	
A		UPDATED DRAWING	4/21/15	HR/LL

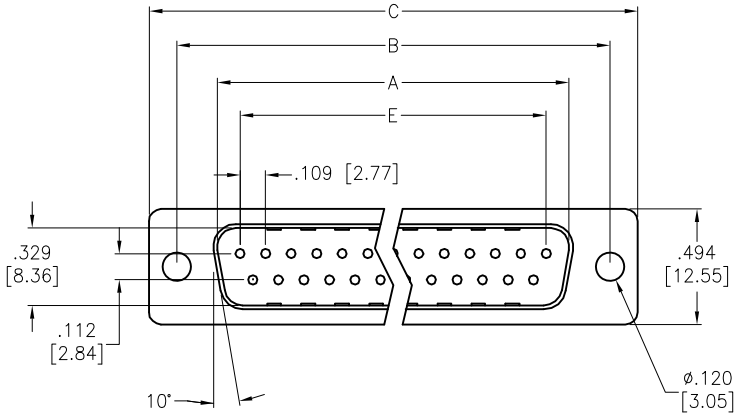

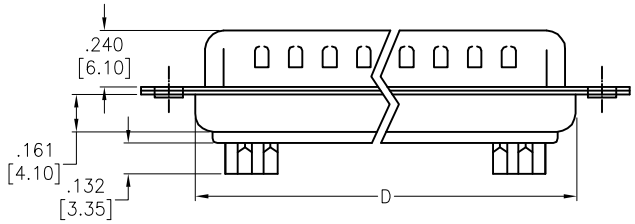

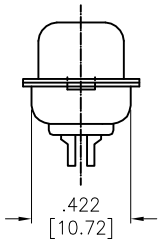

DXXX	NO. OF CONTACTS	DIMENSIONS				
		A	B	C	D	E
DE09	9	.666 [16.92]	.984 [24.99]	1.213 [30.81]	.756 [19.20]	.436 [11.08]
DA15	15	.994 [25.25]	1.311 [33.30]	1.543 [39.20]	1.091 [27.70]	.763 [19.39]
DB25	25	1.534 [38.96]	1.852 [47.04]	2.088 [53.04]	1.618 [41.10]	1.309 [33.24]
DC37	37	2.182 [55.42]	2.500 [63.50]	2.732 [69.40]	2.256 [57.30]	1.963 [49.86]

SPECIFICATIONS:
Material:
Insulator: PBT, glass reinforced, rated UL 94V–0
Insulator color: Black
Contacts: Brass
Front Shell: Steel, Nickel plated
Back Shell: Steel, Tin plated
Plating:
Gold flash over Nickel underplate overall
Electrical:
Operating voltage: 250 VAC max
Current rating: 3 Amps max
Contact resistance: 20 mohms max
Insulation resistance: 1,000 Mohms min @ 500 VDC
Dielectric withstanding voltage: 1,000 VAC for 1 minute
Environmental:
Lead free, RoHS compliant

RoHS COMPLIANT

UNLESS OTHERWISE SPECIFIED
ALL DIMENSIONS ARE INCHES [MM]
TOLERANCES: EXCEPT AS NOTED

INCHES		HOLES	
.X	± .10	Ø.X	±.10
.XX	± .020	Ø.XX	±.015
.XXX	± .015	Ø.XXX	±.010

APPROVALS		DATE
DRAWN	SS	4/28/05
CHECKED		
APPROVED		

ADAM TECH
909 Rahway Avenue, Union, NJ 07083
Phone: 908-687-5000 Fax: 908-687-5710

TITLE
D-SUB PLUG, SOLDER CUP
.120 [3.05] MOUNTING HOLES

SIZE	PART NO.	REV.
X	DXXX-PD	A

REF: S00087T | SCALE: NTS | SHEET 1 OF 1