SIGN	DATE	DESCRIPTION	APPROVER
⚠1			
THIS IS CAD DRAWING, DO NOT REVISE MANUALLY!!!			

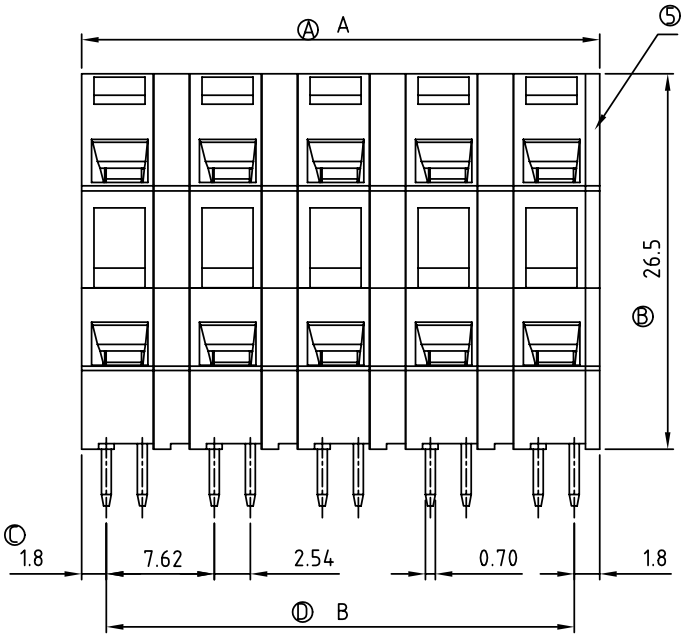

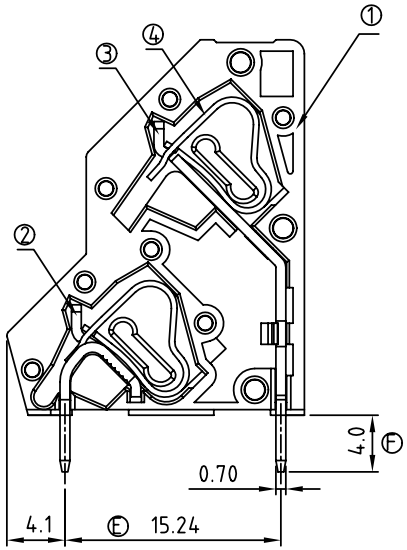

Material

- Item ① Terminal body: Thermoplastic (UL94V-0)
- Item ② Spring clamp of short : Brass Tin plated.
- Item ③ Spring clamp of long : Brass Tin plated.
- Item ④ Spring clamp: Stainless steel
- Item ⑤ Terminal cover : Thermoplastic (UL94V-0)
- Item ⑥ Pad board: Thermoplastic (UL94V-0)

Electrical:	cULus
Voltage rating:	300V
Current rating:	10A
Wire range:	
Solid wire(AWG):	12-28
Stranded wire(AWG):	12-28
Wire strip length:	5-6mm
Withstanding Voltage:	1.6KV
Operating temperature:	-40°C to +115°C
Soldering temperature:	250°C±10°C/5 Sec
⚠1 Safety Approval:	c UL us

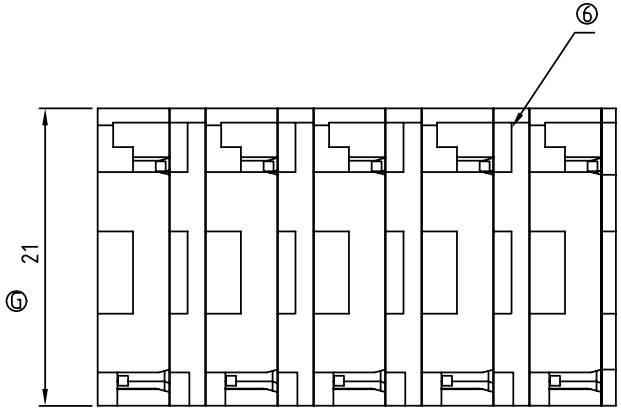

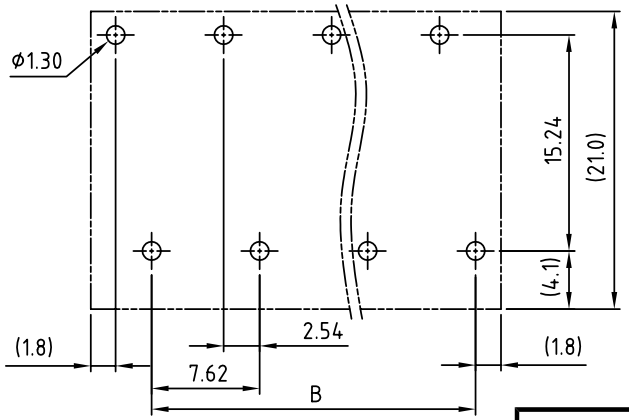

PCB Layout

HQ xx 5 0 x 1 xxxx G

No. OF POLES
- 02: 2×1 POLES
- 04: 2×2 POLES
- ⋮
- 32: 2×16 POLES

COLOR
- 0: BLACK
- 5: GREEN (RAL 6018/T)
- 6: BLUE
- 8: GREY (RAL 7004/P)

G: Pb<40000ppm

0000: "@" Logo (Standard)
000A: "ANYTEK" Mark
Any special item by customer requst. please contact sales department.

POLE		2x2	2x3	2x4	2x5	2x6	2x7	2x8
A		13.70	21.32	28.94	36.56	44.18	51.80	59.42
B		7.62	15.24	22.86	30.48	38.10	45.72	53.34
Tol.	±0.10				±0.15			
POLE	2x9	2x10	2x11	2x12	2x13	2x14	2x15	2x16
A	67.04	74.66	82.28	89.90	97.52	105.14	112.76	120.38
B	60.96	68.58	76.20	83.82	91.44	99.06	106.68	114.30
Tol.	±0.20				±0.30			

ANYTEK

CUSTOMER COPY

ALL RIGHTS RESERVED. REPRODUCTION OR ISSUE TO THIRD PARTIES IN ANY FORM WHATEVER IS NOT PERMITTED WITHOUT WRITTEN AUTHORITY FROM THE PROPRIETOR. PROPERTY OF ANYTEK TECHNOLOGY CO., LTD

TITLE	HQ 7.62mm Series (Solder pins staggered by half the pin spacing)					
PART NO.	HQxx50x1xxxxG			DWG NO.	8HQ0102	
APPROVED	CHECKED	DESIGNED	DRAWN	CUST NO.		Tolerance
		Runner 2010.05.13	Runner 2010.05.13		UNIT: mm	X. ±0.50
					SCALE: NONE	X.X ±0.30
				SHEET: 01/01	REV.: C	X.XX ±0.10
						X° ±1°