REV.	ECN NO.	DATE	SIGN	DESCRIPTION
A		2025/03/20	Henry	New Initial.
B	C251174	2025/09/25	Henry	B XI

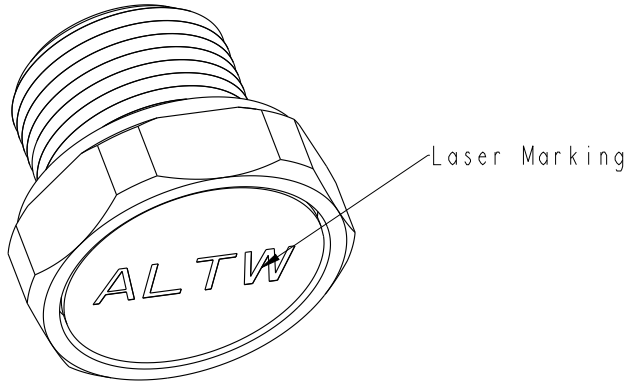

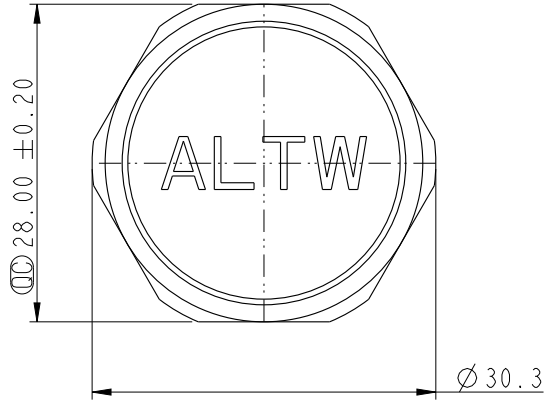

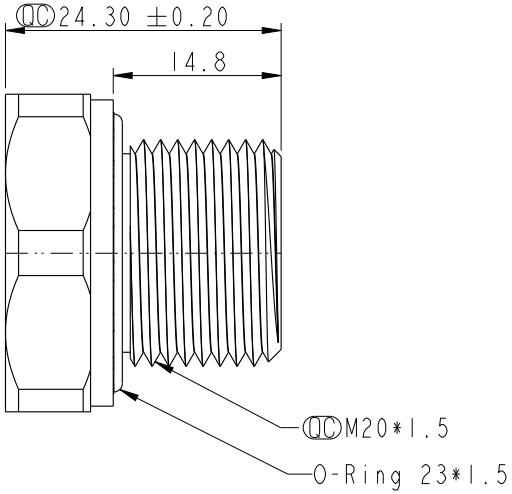

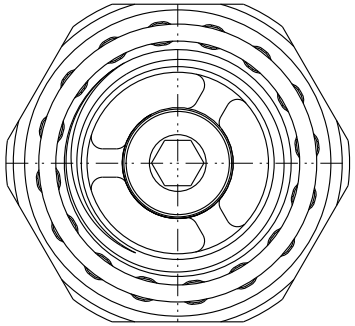

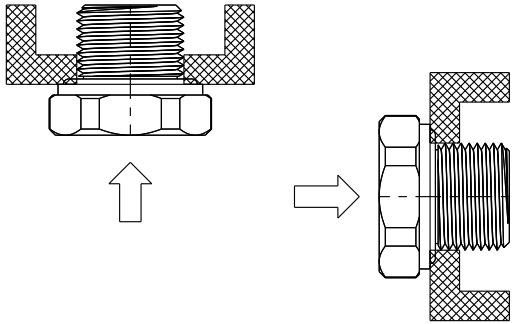

Recommended installation orientation

建議安裝朝向

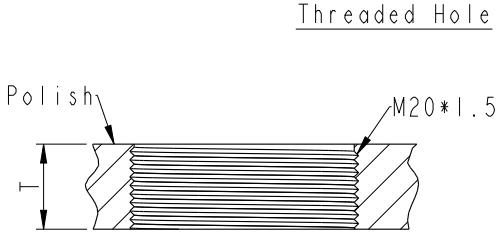

Recommended Panel Cut-Out

建議開孔尺寸

Note:
* QC Important Dimension.
* Waterproof Rate: IP68(2m/1h)
* Body: Aluminum Alloy, Anodizing
* Membrane: ePTFE
* B O-Ring: Rubber, Red.
* Spring: SUS304
* Air Permeability: >500ml/min at 1.5 kPa
* Opening Pressure: 6±1.5 kPa
* Recommended Torque: 4.0~5.0 N.m
* Breaking Torque: >20 N.m
* Recommended Plate Thickness: T≥3.75mm

UNIT: mm

TOLERANCE
.X ±0.25
.XX ±0.1
.XXX ±0.05
ANGLES ±1°

TITLE: RELIEF VENT, METAL, M20 >500ML/MIN@1.5KPA, ME

SCALE 3:2 | SIZE A4 | SHEET 1 OF 1

REV. B | WC-REV. .0 | QC: Inspection item

Amphenol LTW
安費諾亮泰企業股份有限公司

ITEM NO VT-RMM20ME-N08001	DRAWN BY Henry	DATE 2025-09-25
DWG NO VT-RMM20ME-N08001	CHECKED BY Xiaofeng	DATE 2025-09-25
CUSTOMER ALTW	APPROVED BY Jerry	DATE 2025-09-25

THIS DOCUMENT IS SUBJECT TO CHANGE WITHOUT NOTICE. IT IS CONFIDENTIAL AND A PROPERTY OF Amphenol LTW. DISCLOSURE TO THIRD PARTY HAS TO BE AUTHORIZED BY Amphenol LTW.