REV.	ECN NO.	DATE	SIGN	DESCRIPTION
A		2025/03/20	Henry	New Initial.
B	C250519	2025/04/23	Henry	(B) X2
C	C251174	2025/09/20	Henry	(C) X2

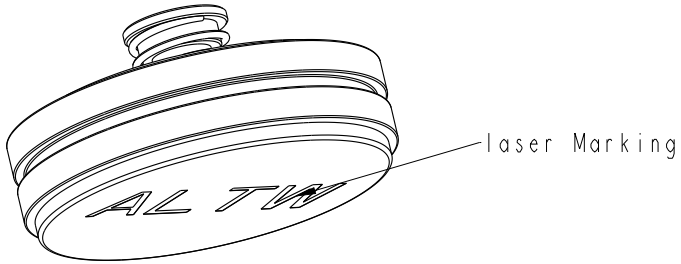

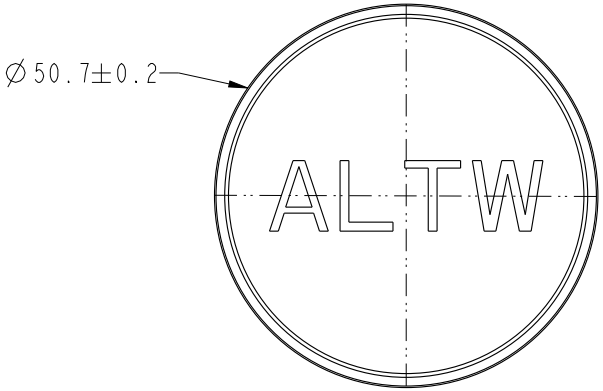

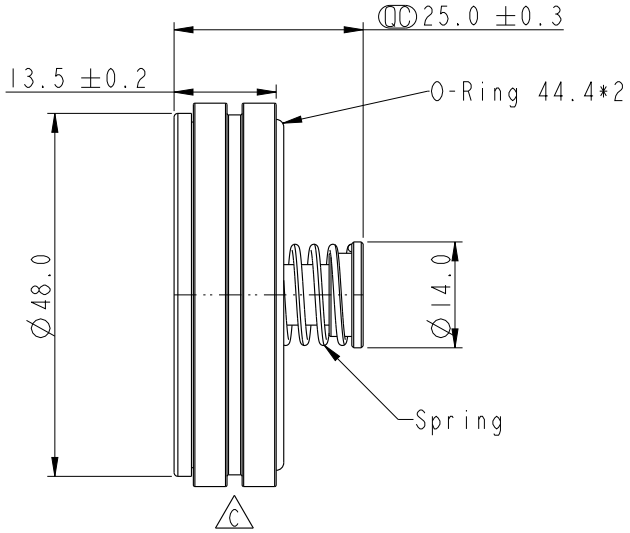

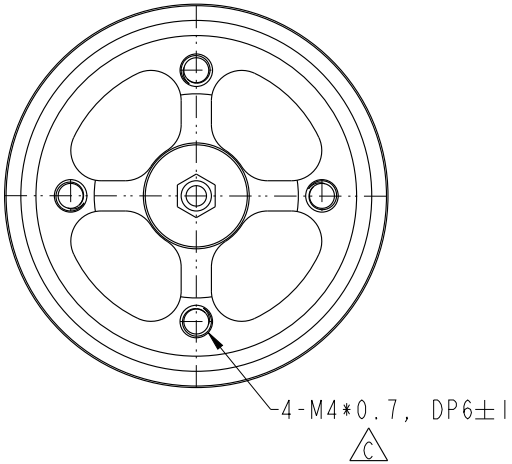

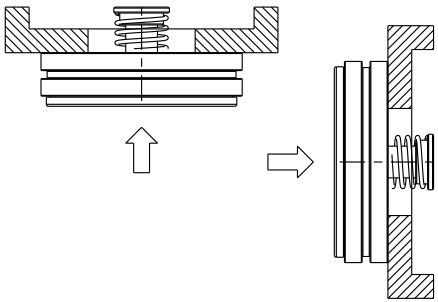

Recommended installation orientation

建議安裝朝向

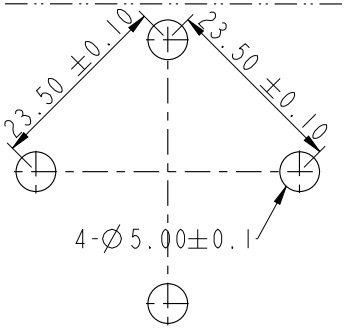

Recommended Panel Cut-Out

建議開孔尺寸

Note:
* QC Important Dimension.
* Waterproof Rate: IP68(2m/1h), IP69K
* Body: Aluminum Alloy, Anodizing
* Membrane: ePTFE
* O-Ring: Rubber,Red.
* Spring: SUS304
* Air Permeability: >650ml/min at 1.5 kPa
* Opening Pressure: 3±1 kPa
* Recommended Torque: 1.5±0.5 N.m
* Breaking Torque: ≥5.5 N.m
* All Parts Are RoHS Compliant.

UNIT: mm

TOLERANCE
.X ±0.25
.XX ±0.1
.XXX ±0.05
ANGLES ±1°

TITLE: RELIEF VENT, METAL, M4(W/HOLE) >650ML/MIN@1.5KPA, ME

SCALE 3:2 | SIZE A4 | SHEET 1 OF 1

REV. C | WC-REV. .0 | QC: Inspection item

Amphenol LTW

安費諾亮泰企業股份有限公司

ITEM NO VT-RMH01ME-N0800I (B)	DRAWN BY Henry	DATE 2025-09-20
DWG NO VT-RMH01ME-N0800I (B)	CHECKED BY Jerry	DATE 2025-09-20
CUSTOMER ALTW	APPROVED BY Fred	DATE 2025-09-20

WI0814-03-RM01A2

THIS DOCUMENT IS SUBJECT TO CHANGE WITHOUT NOTICE. IT IS CONFIDENTIAL AND A PROPERTY OF Amphenol LTW. DISCLOSURE TO THIRD PARTY HAS TO BE AUTHORIZED BY Amphenol LTW.