REV.	ECN NO.	DATE	SIGN	DESCRIPTION
D	LEN159034I~45	2015/09/07	Ruru	Change Logo
E	LEN161010I07~II	2016/01/07	Ruru	Change 44.5 To 45.0
F	C211612	2021/11/10	San	△F x2

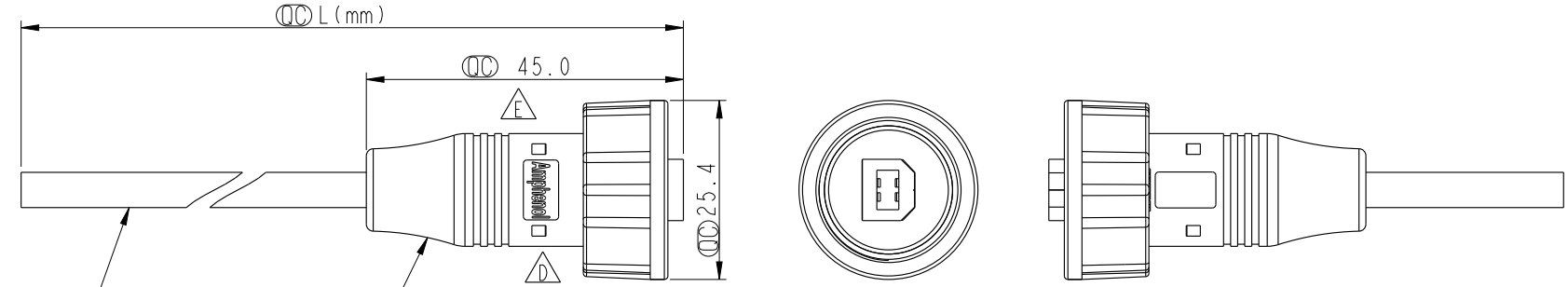

UB-20BFMM-SL7A XX

XX:01~05Meters
01:01Meter
02:02Meters
:
:
05:05Meters
Cable Length(L):01~05Meters

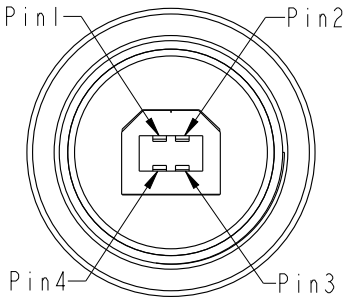

Pin Assignments
Front View

Shield	Drain 地線
4	Black (24AWG) 黑
3	Green (28AWG) 綠
2	White (28AWG) 白
1	Red (24AWG) 紅
Conn.	Wire Color
Pin Out	

Twist

Note:
* QC Important Dimension.
* Waterproof Rate: IP67
* Connector: USB-B Male Type, Black
* Screw Nut: Nylon+GF, Black
* Gasket: EPDM, Black
* Cable: USB2.0 28AWG*1P+24AWG*2C+Al/My+D+B
  UV Resistant, OD=5.0mm, Black
△F * Cable Lenght Tolerance:<=0.3M +25/-0
  >0.3M~1.5M +50/-0
  >1.5M~3M +100/-0
  >3M~5M +150/-0

UNIT:mm

TOLERANCE
± 0.5mm △C

TITLE: USB, B TYPE, 2.0, CABLE W/O SR F, M, MOLDING, SCREW △F

SCALE 1:1 | SIZE A4 | SHEET 1 OF 1
REV. F | WC-REV. A.4 | QC:Inspection item

Amphenol LTW
安費諾亮泰企業股份有限公司

ITEM NO	DRAWN BY Ruru	DATE 2016/01/07
DWG NO UB-20BFMM-SL7AXX	CHECKED BY Rita	DATE 2016/01/07
CUSTOMER ALTW	APPROVED BY Lisa	DATE 2016/01/07

THIS DOCUMENT IS SUBJECT TO CHANGE WITHOUT NOTICE. IT IS CONFIDENTIAL AND A PROPERTY OF Amphenol LTW. DISCLOSURE TO THIRD PARTY HAS TO BE AUTHORIZED BY Amphenol LTW.