REV.	ECN NO.	DATE	SIGN	DESCRIPTION
B	C221890	2022/12/29	Vicky	B XI
C	C231037	2023/08/09	Vicky	C XI
D	C251212	2025/09/30	Vicky	D XI

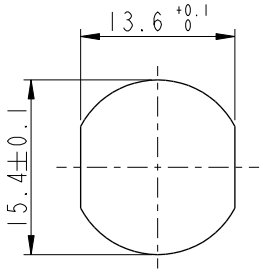

Recommended Panel Cut-Out

SMI2A-XXPMMS-SF8001

XX: No. Of Pin

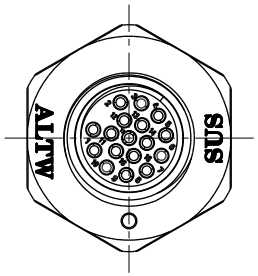

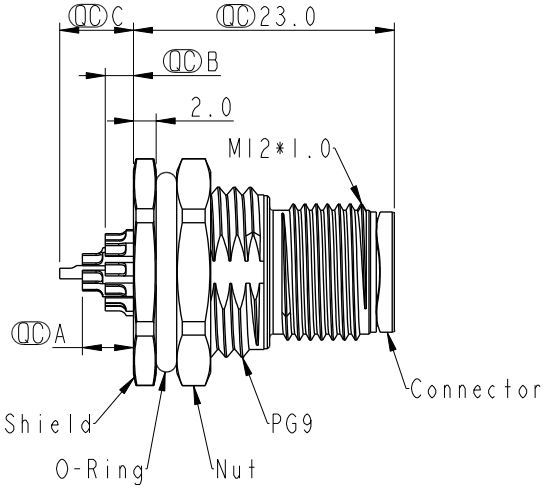

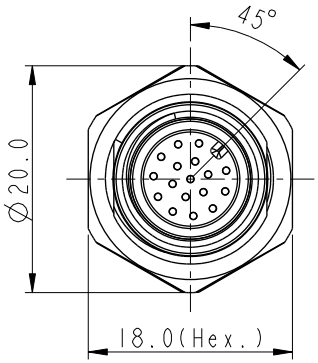

Item No.	A	B	C
	Pin伸出長度		
SMI2A-03PMMS-SF8001		2.5	
SMI2A-04PMMS-SF8001		2.5	
SMI2A-05PMMS-SF8001		2.5	
SMI2A-06PMMS-SF8001		2.5	
SMI2A-08PMMS-SF8001		2.5	
SMI2A-10PMMS-SF8001	4.5	2.5	
SMI2A-12PMMS-SF8001	4.5	2.5	
SMI2A-17PMMS-SF8001	4.5	2.5	6.5

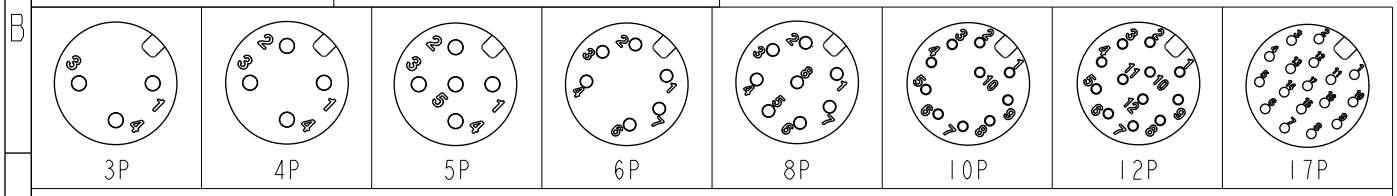

Pin Assignment Front View

Note:
* RoHS Compliant
* QC Important dimension
B * Waterproof rate: IP68, unmated 1m/24h
C IP69K, mated
* Connector
  Housing: Thermoplastic, Black
  Pin: Copper alloy, Gold plated
* Shield: Metal
* Nut: Metal
* O-Ring: Rubber, Black
* For panel thickness max: 4.5mm
D * The Nut Is Packed Separately In The Bag

UNIT: mm

TOLERANCE
.X ±0.25
.XX ±0.1
.XXX ±0.05
ANGLES ±1°

TITLE: N SEN, M12 A-STAINLESS, SCREW RECEPTACLE, M, M, SOLDER

SCALE 3:2 | SIZE A4 | SHEET 1 OF 1

REV. D | WC-REV. A.1 | QC: Inspection item

Amphenol LTW
安費諾亮泰企業股份有限公司

ITEM NO	DRAWN BY Vicky	DATE 2025-09-30
DWG NO SMI2A-XXPMMS-SF8001	CHECKED BY Ruru	DATE 2025-09-30
CUSTOMER ALTW	APPROVED BY Rita	DATE 2025-09-30

W10814-03-RW01A2

THIS DOCUMENT IS SUBJECT TO CHANGE WITHOUT NOTICE. IT IS CONFIDENTIAL AND A PROPERTY OF Amphenol LTW. DISCLOSURE TO THIRD PARTY HAS TO BE AUTHORIZED BY Amphenol LTW.