DWG NO.	SH	REV
C-NDAAFF-C199	1	F

TABLE 1

AHSP P/N	LENGTH "A"	CUSTOMER P/N	DESCRIPTION
NDAAFF-C101	1000 ±20	SF-NDAAFF100G-001M	QSFP 30AWG PASSIVE, 1M
NDAAFF-C102	2000 ±40	SF-NDAAFF100G-002M	QSFP 30AWG PASSIVE, 2M
NDAAFF-C103	3000 ±60	SF-NDAAFF100G-003M	QSFP 30AWG PASSIVE, 3M
NDAAFF-C104	500 ±20	SF-NDAAFF100G-000.5M	QSFP 30AWG PASSIVE, 0.5M
NDAAFF-C107	1500 ±30	SF-NDAAFF100G-001.5M	QSFP 30AWG PASSIVE, 1.5M

REVISIONS

ZONE	REV.	ECN	DESCRIPTION	BY	DATE	APPROVED
	D	RGAO-21020305	ADDED DESCRIPTION COLUMN TO TABLE 1.	N.ZENG	2/4/2021	Y.CHEN
	E	JLOZ-22043003	DELETED ITEM 4 IN TABLE 2.	D.YU	07/29/2022	JESUS.L
	F	RGAO-23121403	ADDED NEW P/N -C107 FOR 1.5M TO TABLE 1.	QJ.DAI	12/15/2023	R.GAO

NOTE: ONLY THREE MOST RECENT RELEASED REVISIONS DISPLAYED.

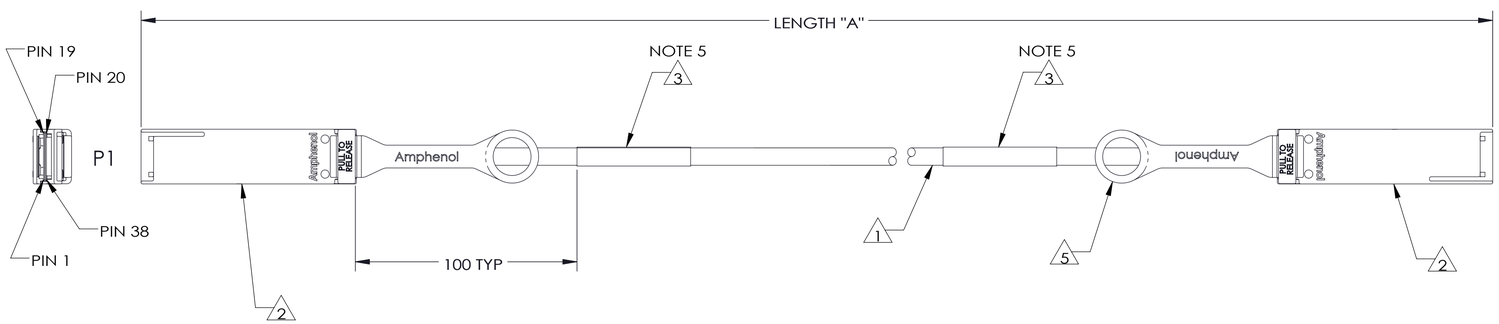

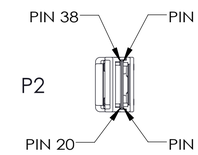

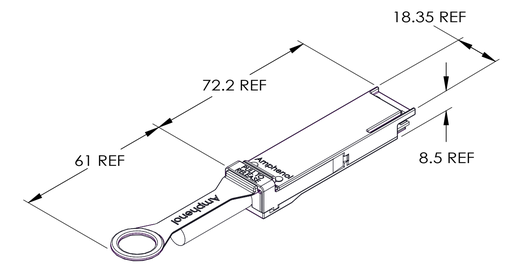

QSFP DIECAST DIMENSIONS

TABLE 2

ITEM No.	DESCRIPTION
1	30 AWG, 8-PR, PVC BLACK, UL AWM STYLE 20276, 80°C, VW1
2	PLUG, QSFP+, REFERENCE SFF-8661
3	LABEL, WRAPPED - AHSP P/N, REV, DATE CODE, LENGTH, CoO & SERIAL NUMBER
4	DELETED
5	LANYARD - PANTONE 347C (GREEN)

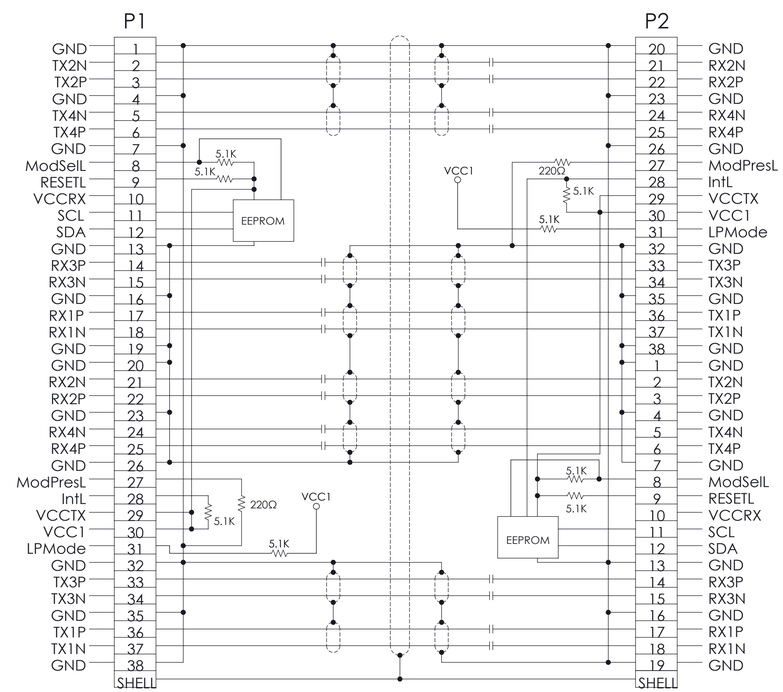

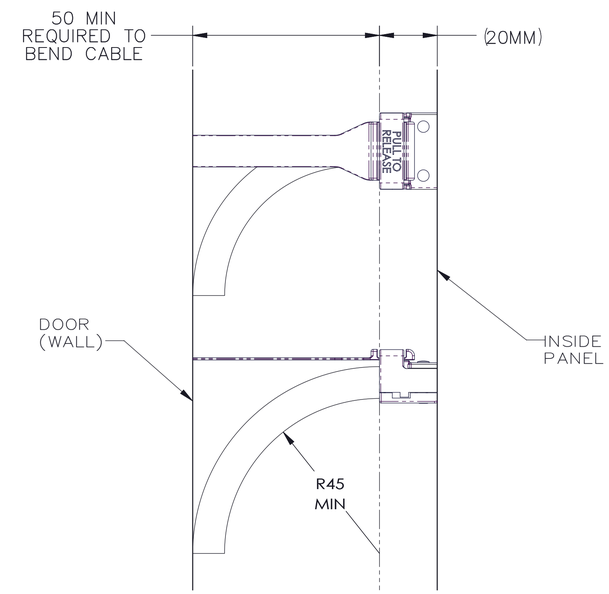

RADIUS FROM EDGE OF DIECAST

NOTE: DC BLOCKING CAP VALUE IS 0.1 μF
EPROM CONNECTED TO VCCTX

8. UL LABEL MUST BE ON THE SHIPPING CARTON PER SUBJECT 764 OF THE UL COMPONENT WIRING HARNESS (ZPFW2) FILE #E86140. CSA LABEL MUST BE ON SHIPPING CARTON.
7. PACKAGE COMPLETED ASSY IN AN APPROPRIATELY SIZED ESD BAG.
6. EPROM CONTENT SHALL BE COMPLIANT WITH SFF-8636 SPECIFICATIONS FOR 100GBASE-CR4. EPROM REVISION IS EQUAL TO AHSP PART NUMBER REVISION.
5. ASSEMBLIES LESS THAN ONE METER REQUIRE ONLY ONE LABEL PLACED ON P1 END.
4. CABLE ASSEMBLIES MUST MEET SHIELDING EFFECTIVENESS REQUIREMENTS OF 35dB FROM 1-10GHz AND 30dB FROM 10-18GHz.
3. COMPLIANT TO EU DIRECTIVE 2011/65/EU - RoHS2.
2. ASSEMBLIES SHALL BE COMPLIANT TO 100GBASE-CR4 SPECIFICATION (EXCEPT NDAAFF-0005).
1. THIS DRAWING IS RESERVED FOR AMPHENOL CABLES ON DEMAND.

NOTES: UNLESS OTHERWISE SPECIFIED

Amphenol RoHS 2011/65/EU

TOLERANCES	
0.0	± 0.25
0.00	± 0.08
0.000	± -
ANGLES	± 1.0°

UNLESS OTHERWISE SPECIFIED DIMENSIONS ARE IN MM

DWN 10/13/2015 DC
CHK 10/13/2015 DD
APVD 10/13/2015 EM

Amphenol AHSP
A Division of Amphenol Corporation
200 Innovative Way, Suite 201, Nashua, N.H. 03062 (603) 879-3000

TITLE CABLE ASSEMBLY, QSFP/QSFP, PSV, 100Ω, 100 GbE, 30 AWG EXD

INTERPRET PER ASME Y14.5

CUSTOMER USE DRAWING

CODE IDENT 31413

PART NO. SEE TABLE 1 REV N/A
DRAWING NO. C-NDAAFF-C199 REV F
SIZE D SCALE 1:1 SHEET 1 OF 1

DWG NO. C-NDAAFF-C199 SH 1 REV F

AHSP_szD_mm.drwdot Rev01/201409