| REV. | ECN NO. | DATE | SIGN | DESCRIPTION |
|---|---|---|---|---|
| F | C221973 | 2022/12/21 | Ruru | F XI |
| G | C231034 | 2023/08/08 | Ruru | G XI |
| H | C251212 | 2025/09/26 | Vicky | H XI |

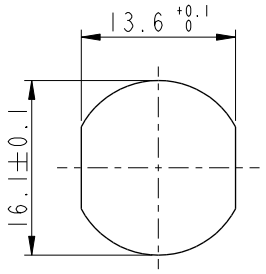


Recommended Panel Cut-Out

B D

C D

MI2A-XXPFFS-SF8002

XX: No. Of Pin

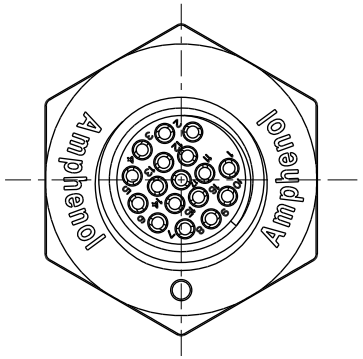


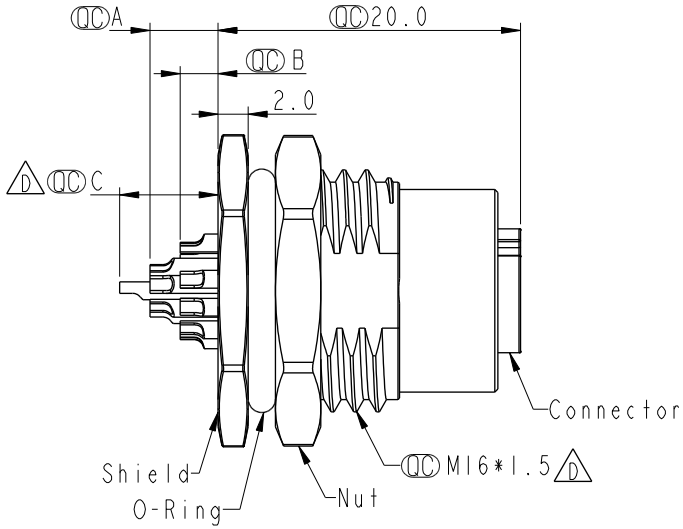


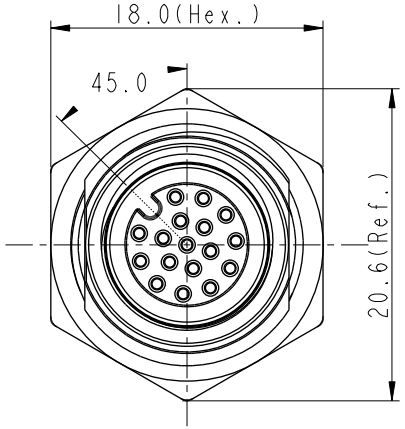


C D

| Item No. | A | B | C |
|---|---|---|---|
| | Pin伸出長度 | | |
| MI2A-03PFFS-SF8002 | | 2.5 | |
| MI2A-04PFFS-SF8002 | | 2.5 | |
| MI2A-05PFFS-SF8002 | | 2.5 | |
| MI2A-06PFFS-SF8002 | | 2.5 | |
| MI2A-08PFFS-SF8002 | | 2.5 | |
| MI2A-10PFFS-SF8002 | 4.5 | 2.5 | |
| MI2A-12PFFS-SF8002 | 4.5 | 2.5 | |
| MI2A-17PFFS-SF8002 | 4.5 | 2.5 | 6.5 |

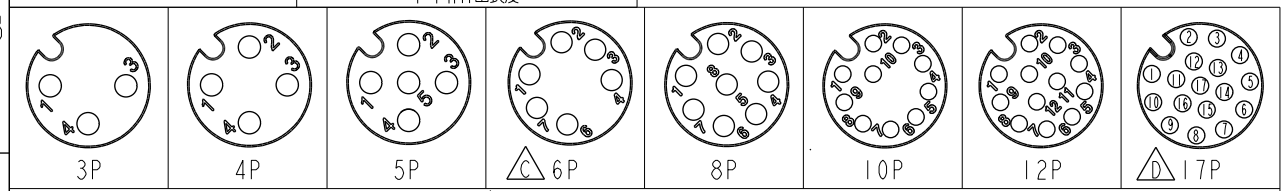


Pin Assignment Front View

D E Note:
- * RoHS Compliant
- * QC Important dimension
- C F * Waterproof rate: IP68, unmated 1m/24h
  - G IP69K, mated
- * Connector
  - Housing: Thermoplastic, Black
  - Pin: Copper alloy, Gold plated
  - O-Ring: Rubber, Green
- * Shield: Metal
- * Nut: Metal
- * O-Ring: Rubber, Black
- * For panel thickness max: 4.5mm
- H * The Nut Is Packed Separately In The Bag

UNIT:mm

TOLERANCE
.X ±0.25
.XX ±0.1
.XXX ±0.05
ANGLES ±1°

TITLE: N SEN, MI2 A, SCREW RECEPTACLE, F, F, SOLDER E

SCALE 3:2 | SIZE A4 | SHEET 1 OF 1

REV. H | WC-REV. A.5 | QC: Inspection item

**Amphenol LTW**

安費諾亮泰企業股份有限公司

| | | |
|---|---|---|
| ITEM NO | DRAWN BY: Vicky | DATE: 2025-09-26 |
| DWG NO: D MI2A-XXPFFS-SF8002 | CHECKED BY: Ruru | DATE: 2025-09-26 |
| CUSTOMER: ALTW | APPROVED BY: Rita | DATE: 2025-09-26 |

WI0814-03-RW01A2

THIS DOCUMENT IS SUBJECT TO CHANGE WITHOUT NOTICE. IT IS CONFIDENTIAL AND A PROPERTY OF Amphenol LTW. DISCLOSURE TO THIRD PARTY HAS TO BE AUTHORIZED BY Amphenol LTW.