REV.	ECN. NO.	DATE	SIGN	DESCRIPTION
A	Initial Release	2010/03/24	Dominic	
B	LEN1130364	2011/03/11	Kevin Wang	Modify the Dimension
C	LEN1180143	2011/08/27	baowei	Add Wire Size

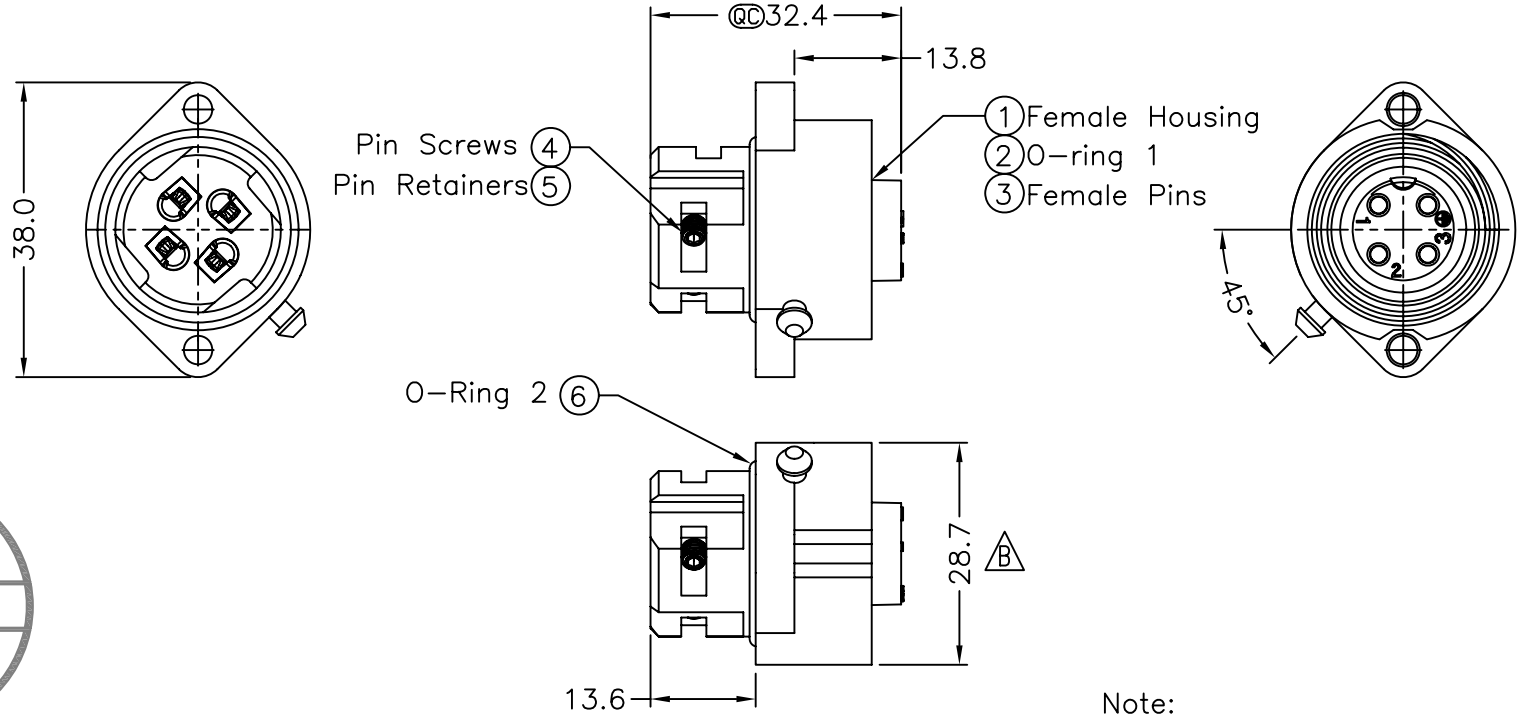

ALTW CONFIDENTIAL 2011.08.27 R&D DEPT.

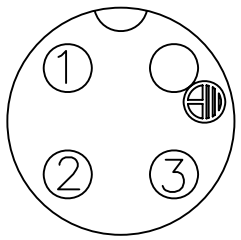

Pin Assignments
Front View

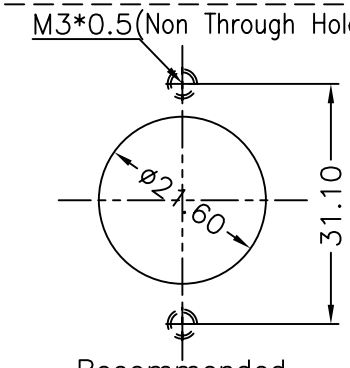

Recommended
Panel Cut-Out

ALTW DCC. DEPT. CONFIDENTIAL 2011.08.30 ISSUED

Note:
* QC Important Dimensions.
* Waterproof Rate: IP67
* Female Housing: Nylon+GF, Black
* Female Pin: Copper Alloy, Silver Plated
* Pin Screws: 1.5mm(HEX), Stainless Steel
  For wire assembly, tightened by tool.
* Cond. Retainer: Copper Alloy, Silver Plated
* O-ring: Silicone, Gray
* Flame Class: UL94V-0
7 * One Set Assembled in one PE Bag
* 1.5mm Hex Tool for Screws sold separately
C * Wire Size Range: 14AWG~18AWG

UNIT:mm	TITLE: Panel Female Power Conn.16Amp Screw in Type Pin (Silver Plated)	Amphenol LTW 安費諾亮泰企業股份有限公司	ITEM NO: LTWPWG-04PFFB-SC7002	DRAWN BY: baowei	DATE: 2011/08/27
TOLERANCE: .X ±0.25, .XX ±0.1, .XXX ±0.05, ANGLES ±1°	SCALE: Free / SHEET: 1 OF 1		DWG NO: LTWPWG-04PFFB-SC7002	CHECKED BY: Micky	DATE: 2011/08/27
	REV. C / SIZE A4 / QC :Inspection Item		CUSTOMER	APPROVED BY: Victor	DATE: 2011/08/27

THIS DOCUMENT IS SUBJECT TO CHANGE WITHOUT NOTICE. IT IS CONFIDENTIAL AND A PROPERTY OF Amphenol LTW. DISCLOSURE TO THIRD PARTY HAS TO BE AUTHORIZED BY Amphenol LTW.

FMWI0702-01-01A2