REV.	ECN NO.	DATE	SIGN	DESCRIPTION
C	LE3-680010	2006/05/25	Lin Li Qing	Change ZSE00100377 To ZSE00100103
D	LEN1470236	2014/07/16	Aric	Change New Logo.
E	C250166	2025/02/17	Vicky	E X2

D

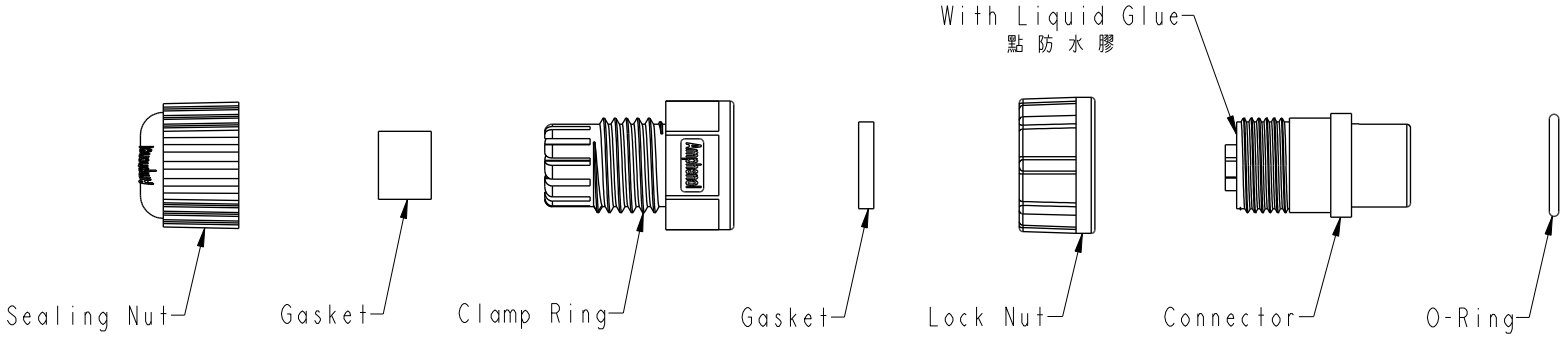

C E Note:

* QC Important Dimension
* Waterproof Rate: IP67
* Seals for Cable OD:∅4.5mm~∅6.5mm
  (防水墊圈線徑:∅4.5mm~∅6.5mm)
* One Set Unassembled in One PE Bag
  (每一組未組裝,放置於一個PE袋,並封口)
* Housing: Nylon+GF,Black
* Pin:Copper Alloy, Gold Plated
* O-Ring: EPDM, Black
* Lock Nut: Nylon+GF, Black
* Gasket: EPDM, Black
* Seals: EPDM, Black
* Clamp Ring: Nylon, Black
* Sealing Nut: Nylon, Black

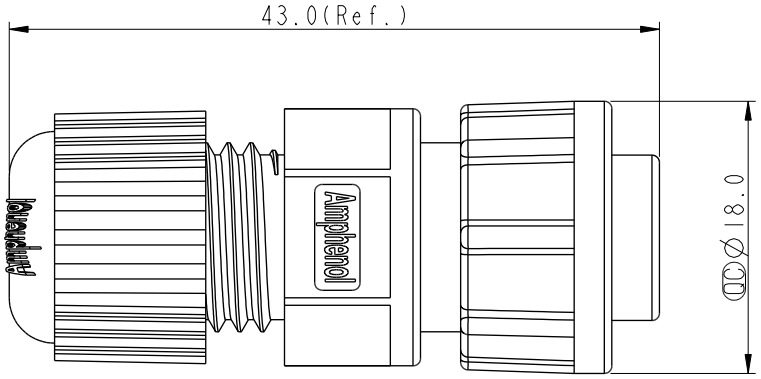

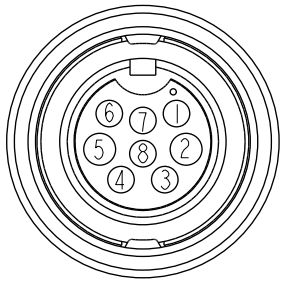

Pin Assignments
Front View 前視圖

UNIT:mm

TOLERANCE
.X ±0.25
.XX ±0.1
.XXX ±0.05
ANGLES ±1°

TITLE: O CERES, B-5A+2A, 08P, CABLE W/O SR F, M, FI SOLDER, 2LOCK E

SCALE	SIZE	SHEET
1:1	A4	1 OF 1
REV. E	WC-REV. A.3	QC:Inspection item

Amphenol LTW
安費諾亮泰企業股份有限公司

ITEM NO	DRAWN BY	DATE
BDU-08BFMA-LL7001	Vicky	2025-02-17
DWG NO: BDU-08BFMA-LL7001	CHECKED BY: Rita	DATE: 2025-02-17
CUSTOMER: ALTW	APPROVED BY: Fred	DATE: 2025-02-17

THIS DOCUMENT IS SUBJECT TO CHANGE WITHOUT NOTICE. IT IS CONFIDENTIAL AND A PROPERTY OF Amphenol LTW. DISCLOSURE TO THIRD PARTY HAS TO BE AUTHORIZED BY Amphenol LTW.