SIGN	DATE	DESCRIPTION	APPROVER
1	4/01'09	Current,wire range,torque, sefety approval are changed	Jody
2	11/17'09	Wire guard solder pin is changed from Brass to Copper	Aaron

THIS IS CAD DRAWING, DO NOT REVISE MANUALLY!!!

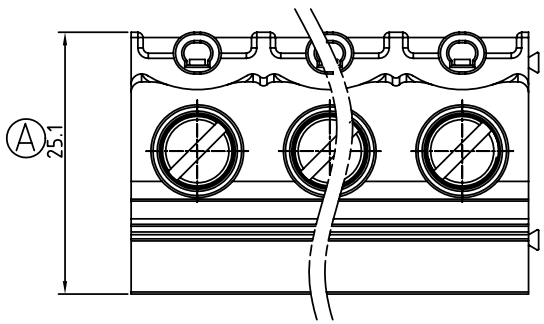

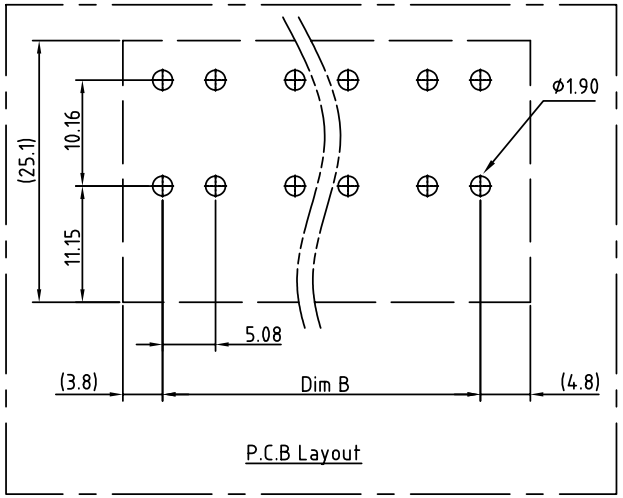

Material:

- Item 1 Terminal housing :Thermoplastic (UL 94V-0)
- Item 2 Clamp : Steel stamping , Zinc plated
- 2 Item 3 Wire guard solder pin : Copper,Tin plated
- Item 4 Terminal screw: Steel Zinc plating"-"slot type

	Electrical	cULs	IEC
	Voltage rating :	300V	1000V
1	Current rating :	65A	76A
	Wire range :	16.00mm²	
	Solid wire (AWG) :	6-20	
	Stranded wire (AWG) :	6-20	
1	Torque (LB-In.) :	12Lb.In	
	Screw :	M4.5	
	Wire strip length :	10-11mm	
1	Withstanding voltage :	1.6KV	6KV
	Operating temperature :	-40°C+115°C	
	Soldering temperature :	250°C+10°C/5 Sec	
1	Safety Approval :	c UL us	

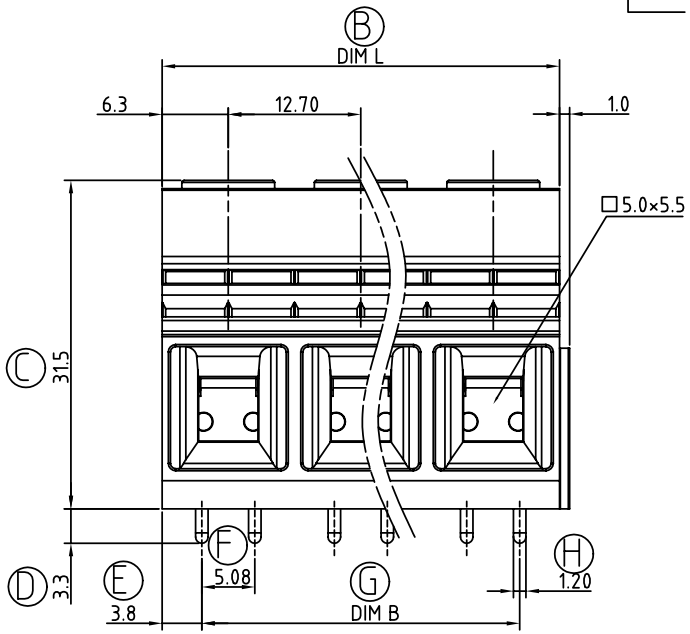

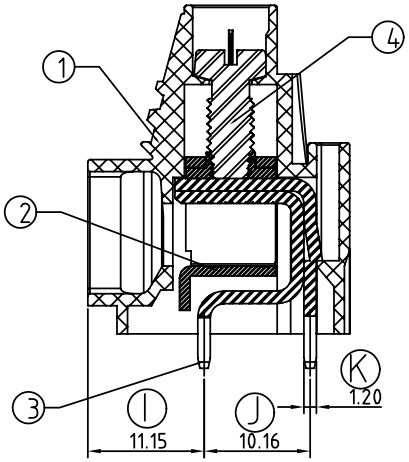

VP xx 85 x 5 xxxx G

02	2 CONTACTS	0: Black	0000 Standard @ Logo	RoHS
03	3 CONTACTS	5: Green (RAL 6018/T)	000A Standard ANY Logo	Pb<40,000ppm
...	...	6: Blue	Any special item by	
12	12 CONTACTS	8: Grey (RAL 7035/D)	customer request,	
			please contact sales	
			department.	

Poles	02	03	04	05	06	07	08	09	10	11	12
Dim L	25.40	38.10	50.80	63.50	76.20	88.90	101.60	114.30	127.0	139.70	152.40
Dim B	17.78	30.48	43.18	55.88	68.58	81.28	93.98	106.68	119.38	132.08	144.78
TOL	±0.15				±0.20				±0.30		

ANYTEK

CUSTOMER COPY

ALL RIGHTS RESERVED. REPRODUCTION OR ISSUE TO THIRD PARTIES IN ANY FORM WHATEVER IS NOT PERMITTED WITHOUT WRITTEN AUTHORITY FROM THE PROPRIETOR. PROPERTY OF ANYTEK TECHNOLOGY CO., LTD

TITLE	VP 12.70 Series (Double tail) Contacts Pin Pitch 5.08mm				
PART NO.	VPxx85x5xxxxG			DWG NO.	8VP0101
APPROVED	CHECKED	DESIGNED	DRAWN	CUST NO.	
		Aaron 2009.11.17	Aaron 2009.11.17	UNIT: mm / SCALE: NONE	
				SHEET: 01/01	REV.: D

Tolerance	
X.	±0.50
X.X	±0.30
X.XX	±0.10
X°	±1°